TRIUMF

ANNUAL REPORT
SCIENTIFIC ACTIVITIES
2003

ISSN 1492-417X

CANADA'S NATIONAL LABORATORY
FOR PARTICLE AND NUCLEAR PHYSICS

OPERATED AS A JOINT VENTURE

MEMBERS:

THE UNIVERSITY OF ALBERTA
THE UNIVERSITY OF BRITISH COLUMBIA
CARLETON UNIVERSITY
SIMON FRASER UNIVERSITY
THE UNIVERSITY OF VICTORIA

ASSOCIATE MEMBERS:

THE UNIVERSITY OF GUELPH
THE UNIVERSITY OF MANITOBA
McMASTER UNIVERSITY
L'UNIVERSITÉ DE MONTRÉAL
QUEEN'S UNIVERSITY
THE UNIVERSITY OF REGINA
THE UNIVERSITY OF TORONTO

UNDER A CONTRIBUTION FROM THE
NATIONAL RESEARCH COUNCIL OF CANADA

DECEMBER 2004

The contributions on individual experiments in this report are outlines intended to demonstrate the extent of scientific activity at TRIUMF during the past year. The outlines are not publications and often contain preliminary results not intended, or not yet ready, for publication. Material from these reports should not be reproduced or quoted without permission from the authors.

ACCELERATOR TECHNOLOGY DIVISION

INTRODUCTION

The Accelerator Technology Division is responsible for most of the engineering and design at TRIUMF as well as support of the beam dynamics effort for international collaborations. Other responsibilities include planning for projects and shutdowns, electronics development and services, the Building department, the Design Office and Machine Shop. This year, as for the past number of years, much of the available effort went into supporting the ISAC program, in particular the ISAC-II cryomodule design and specification of the helium refrigeration system. In the Requests for Engineering Assistance (REA) that were submitted during the year, there were 37 ISAC related jobs and 30 non-ISAC in mechanical engineering and design.

The Canadian Nuclear Safety Commission requires TRIUMF to develop and adopt a quality assurance program for all activities at the laboratory. A task force, which included two members of the division, was set up to develop this program and for the most part the new plan is adopting many of the policies and procedures that already exist at TRIUMF. In some cases the documentation and formalization of the procedures will have to be improved and this will have some impact on the work of the division. Hopefully there will be an overall benefit emerging from adopting this quality management system.

In addition to the CERN work described elsewhere, the Beam Dynamics group provided support in calculating the 50 GeV ring impedance for J-PARC, played a key role in some new FFAG developments, and carried out studies on a lattice for a radioactive storage ring. A number of magnets were designed and two contracts for the fabrication of superconducting solenoids for the ISAC-II linac were supervised. The Kicker group, in addition to the LHC injection kickers, designed and built a muon kicker for an experiment at PSI and started a program of research on the use of IGBTs for pulsed power applications.

The engineering and design groups worked on many parts of the ISAC-II superconducting linac; the first medium-beta cryomodule was fabricated and assembled, cavity tuners were developed, the refrigeration system was specified, the contract for the 500 W at 4.5 K system was awarded, and a decision was made to take responsibility for the liquid helium distribution system in-house. Designs for the TITAN rf cooler prototype and the TIGRESS detector were other parts of the ISAC work that were supported this year. In the support of external experiments the KOPIO detector work continued, the support stand for the NPDGamma experiment at LANL was commissioned, an engineer was assigned to supervise the contract for the Qweak coils for an experiment at Jefferson Lab., the ATLAS calorimeter fabrication at Victoria and TRIUMF was completed, and at Carleton the forward calorimeter is nearing completion.

The Planning group looked after the scheduling and coordinating of a number of ISAC projects, the planning of the cyclotron shutdowns and provided project information for the development of the TRIUMF Five-Year Plan (2005–2010). The Machine Shop is under new management with the retirement of Roland Roper, who served in this position since 1980. Ivor Yhap is now the new Machine Shop supervisor. Two new machinists were hired into the shop. The Building department was involved with a number of maintenance and repair jobs, some structural designs, and review of designs for the new TRIUMF House.

In the Electronic Services area a major task was installation of the network communications infrastructure in the new ISAC-II building. Hardware support was given to a number of experimental groups, the CERN kicker work and controls group, and software support to TIGRESS, μSR, and ISAC motor systems.

The Electronics Development group continued to provide all of the hardware installation, maintenance and upgrades for the ISAC control system. EPICS/PLC systems were provided for several applications, and some application-specific VME-based modules were designed and built. The development of the prototype data acquisition boards for CERN continued with the fourth version DAB-IV under design.

BEAM DYNAMICS

J-PARC Collaboration

The Japan Proton Accelerator Research Complex (J-PARC) is an amalgamation of the formerly proposed Japan Hadron Facility (JHF) at KEK and the Neutron Science Project (NSP) at JAERI. Under construction at the Tokai campus, the J-PARC will pursue frontier science in particle and nuclear physics, materials and life sciences, etc., using a new proton accelerator complex at the highest beam power in the world. TRIUMF scientists have a particular stake in this endeavour: J-PARC-Nu, the Next Generation Long Baseline Neutrino Oscillation Experiment. J-PARC consists of a 400 MeV linac followed by 3 GeV and 50 GeV rapid cycling synchrotrons, and the neutrino beam line will use fast extracted beams from the latter machine.

In preparation for later involvement with the construction of particle-beam damping systems, TRIUMF was asked to consult on ring impedance estimates and advise on potential beam instability in the 50 GeV

main ring. A wide range of impedance sources was considered, and in particular kicker magnets with reactive terminations – for which there were no previously existing formulae. Both bunched and coasting beam, longitudinal and transverse, instability thresholds and growth rates were estimated. This is complicated by the fact that there are vastly different parameter sets during injection, ramping and the fast and slow extractions. For the bunched beams, a key issue was to understand the stability of high-order head-tail modes at very large chromatic tune shift, which is an unusual condition. Recommendations and cautions made to the "Accelerator Technical Advisory Committee" included: (i) not to operate the ring with near or zero chromaticity during slow extraction; (ii) to be wary of introducing resonant transverse impedances into pumping-port enclosures and rf cavities by careless design; and (iii) to add small resistive loads to the TW-type kicker magnets to reduce troublesome reflections.

Radioactive ion storage ring

Last year's report described some preliminary studies of the feasibility of storing radioactive ions from ISAC for more efficient experimental use. This work continued in 2003, focusing on issues affecting injection into the ring, and on the design of a suitable magnet lattice.

The TSR at MPI Heidelberg has demonstrated successful storage of stable ions over a wide mass range, those that are highly stripped exhibiting lifetimes of many minutes. But the conventional injection process takes 10 minutes and captures only one charge state. The radioactive ion beams from ISAC-II, which contain a wide charge state distribution (CSD), clearly require a faster and more inclusive process. Injection by foil stripping offers this possibility.

Figure 287 shows the dependence on atomic number Z expected for various properties of the beam leaving ISAC-II, including $A/\bar{q}$ (where $\bar{q}$ is the average charge), and $n_e = Z - \bar{q}$, the average number of electrons remaining, before (S2) and after (S3) stripping at final energy E/A. The parameter $\Delta = (q_+ - q_-)/2\bar{q}$, where q_+ and q_- are the charge states enclosing $\geq$99% of the CSD. Apparently $\pm$9% charge acceptance in the ring would be sufficient to contain 99% of the ISAC beam.

Injection by stripping would be simple and instantaneous, so that the ISAC beam could be fed into the ring continuously during the accumulation period. Moreover, stripping would:

- increase the average ionic charge $\bar{q}$, reducing the bending power and diameter required for the ring;

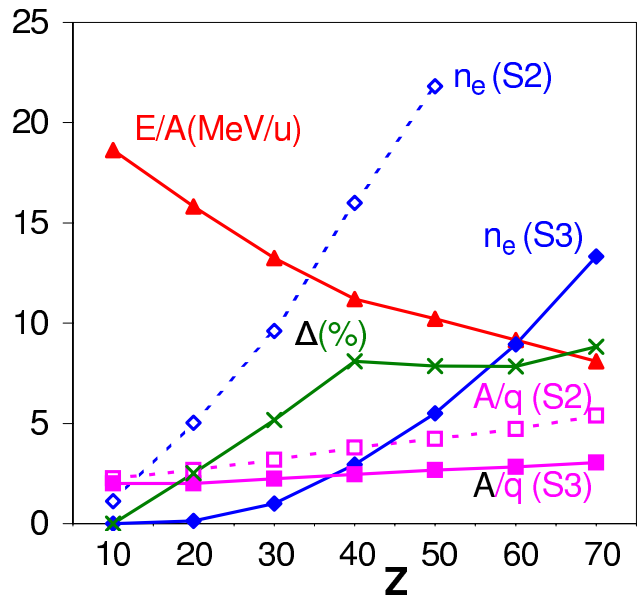

Fig. 287. ISAC-II beam properties vs. atomic number Z.

- reduce the fractional width of the CSD, enabling a greater fraction of the beam to be contained;
- make possible capture of the multiple charge states present in the ISAC-II beam.

The basic drawback to injection by stripping is that the stored beam may make further passes through the foil, leading to loss of beam quality and possibly of the ions themselves. Assuming a 260 μg/cm^2 carbon foil, sufficiently thick to give an equilibrium CSD, neither multiple scattering nor energy straggling should cause significant damage. The energy loss is also tolerable for light ions, but it could rule out storage of those with the highest $Z(>50)$. Electron transfer is the most serious threat: on each passage the CSD will re-equilibrate and the empty charge states outside the ring's acceptance will be repopulated; that fraction of beam will be lost on each pass through the foil. It is clearly vital to maximize the charge acceptance and minimize the number of foil interceptions. Fortunately, the interception rate can be significantly reduced by painting the incoming beam over the acceptance. If this is done in both transverse planes, the average rate can be reduced to 1 in 400 turns.

These considerations have two major implications for the ring design: firstly, a high charge/momentum acceptance requires a low dispersion lattice, large aperture magnets, and careful control of higher-order effects; and secondly, storage of multiple charge states requires zero dispersion at the stripping foil, ruling out momentum painting.

Initial lattice studies have focused on the 2.6 T-m "Midi" ring, capable of storing 80 MeV/u fully stripped C ions. This is conceived as being four-sided, with the

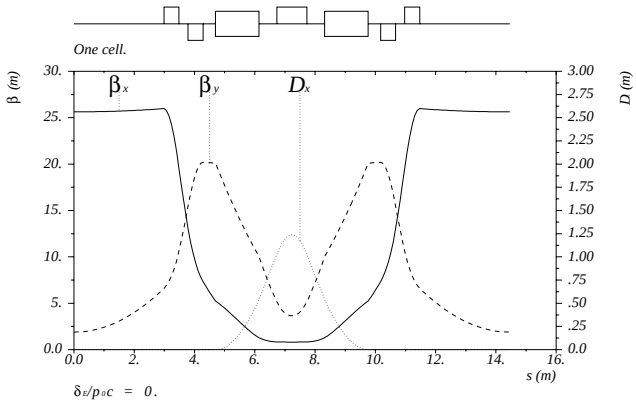

Fig. 288. Twiss functions for the lattice under study.

long straights assigned to injection, cooling, acceleration and experiment. As all these functions require zero dispersion, a natural choice for the arcs has been a double-bend achromat (DBA). The lattice chosen, of the form 0FD0B0F0B0DF0, restricts the dispersion to a narrow region with a low peak value of 1.24 m and also low β_x – crucial features for realizing a high charge acceptance (see Fig. 288). The circumference is 57.8 m, the tunes 2.57(x) and 1.84(y), and the transition energy 7.08. Initial tracking studies have shown good behaviour for charge or momentum excursions up to ±4% – sufficient to contain 99% CSD for ions with $Z \leq 25$.

With ion losses kept to the $\lambda = 1\%$ level for each foil traversal, and transverse painting reducing the average traversal rate to 1/400, then if charge Q is injected on each turn, the stored charge will exponentially approach $Q/\lambda F_x F_y = 40{,}000\ Q$. A more practical aim would be to stop after 40,000 turns (≃40 ms) with ≃25,000 Q – a sizeable improvement over present beam intensities.

Muon Acceleration in an FFAG

The collaboration with BNL and FNAL on the design of FFAG accelerators for a future neutrino factory and/or muon collider continues. "Non-scaling" (i.e. variable-tune) FFAGs spanning the energy range 5–20 GeV hold the promise of reduced acceleration costs and reduced cooling requirements compared with the alternative, recirculating linacs. The FFAG designs are rapidly approaching maturity and TRIUMF has played a key role in this achievement. The discovery of a new mode of acceleration coupled with a new understanding of the lattice optimization based on thin-element models for the optics, has led to a three-fold reduction in machine circumference and cost.

To achieve rapid acceleration (≈10 μs) the FFAG ring is filled with rf cavities operating at fixed frequency. This sets limits on the phase variation allowable during acceleration. Although not isochronous,

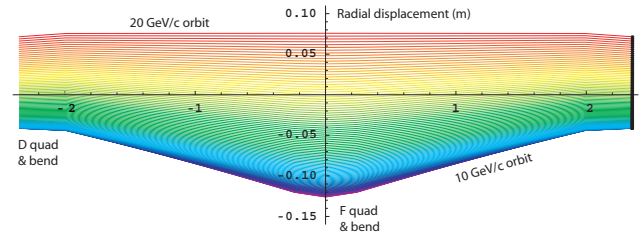

Fig. 289. Single cell, length 5 m, of FFAG showing closed orbits of momenta from 10–20 GeV/c (cold to hot) as a function of radius (m).

the quadratic variation of path length on momentum in the non-scaling FFAG is the origin of a novel mode of acceleration in which the beam slips back and forth across the crest of the rf waveform. This is understood in terms of a libration manifold, shown in Fig. 289, which opens up once the acceleration per cell exceeds a critical value depending on the range of pathlengths, and is the result of strongly non-linear longitudinal dynamics. The manifold links injection to extraction energy yielding a near linear dependence of machine energy range on accelerating voltage, which is a considerable benefit.

A hallmark of the non-scaling FFAG lattices is their ability to compact a very wide range of momenta into a narrow radial band, a property which is helpful not only in terms of lowering magnet aperture and cost, but also in restricting path length variations with momentum. As shown in Fig. 290, $\Delta R/R$ is of order 10^{-3} for $\Delta p/p$ of order unity. This property is associated with the use of F0D0 or FDF triplet lattices in which the F magnet provides a reverse bend.

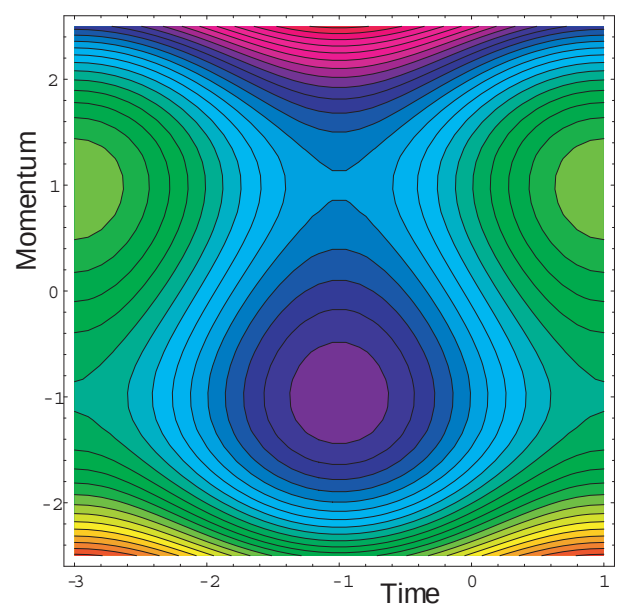

Fig. 290. Phase space generated by quadratic pendulum oscillator.

Thin-element models of the non-scaling FFAG lattices have been used to derive simple analytic formulae for key properties, such as orbit displacement and path length. These confirm the parabolic dependence of path-length on momentum observed with standard orbit codes, reveal the factors which should be adjusted to minimize path-length variation, and form a useful starting point for thick-element design (for which analytic formulae have also been developed). In the case of a 10–20 GeV/c muon ring, the thin-element formulae are in reasonable agreement with the predictions of standard orbit codes – somewhat better for F0D0 than for triplet lattices. The thick-element formulae are in excellent agreement for both.

MAGNETS

In addition to supervising the contract for the fabrication of the CERN twin aperture quadrupoles, described in the CERN collaboration section, work was carried out on a number of other magnets during the year.

In 2002, a small $X - Y$ steering magnet was designed to fit between the ISAC-II cryomodules. In 2003, 8 of these magnets were constructed.

In 2002, Everson Electric Company (Bethlehem, PA) was contracted to design and build 5 superconducting solenoids for the ISAC-II medium-beta cryomodules. In 2003, Everson went bankrupt before completing the first magnet. As the coils for the prototype had been wound and potted in wax, we obtained the coils from the receiver and completed the magnet at TRIUMF. On December 11, the magnet reached 9.02 T without quenching.

Since ISAC needed 5 solenoid magnets, and Everson was only able to produce part of one, Accel Instruments (Germany) was contracted to supply a prototype magnet and 4 production magnets. At year-end, Accel was ready to test their prototype magnet.

A high field C-frame dipole was designed for the ISAC HEBT (S-bend) transfer line [TRI-DN-03-4]. The transfer line needs 4 of these magnets. A contract was awarded to Alpha Magnetics (California) for the coils. The contract to machine the steel and assemble the magnets was awarded to Sunrise Engineering (Delta, BC). These magnets are expected to be on site in May, 2004.

Work began on fulfilling TRIUMF's commitment to assist the Canadian collaboration on the Qweak experiment at Jefferson Lab. TRIUMF is assisting in the purchase of the large coil assemblies for the QTOR spectrometer. The spectrometer is being designed at MIT-Bates Laboratory. MIT-Bates expects to issue final coil drawings in February-March, 2004. Once these drawings are available, TRIUMF will request tenders for the manufacture of the 8 coils plus a spare. Figure 291 shows the single coil arrangement.

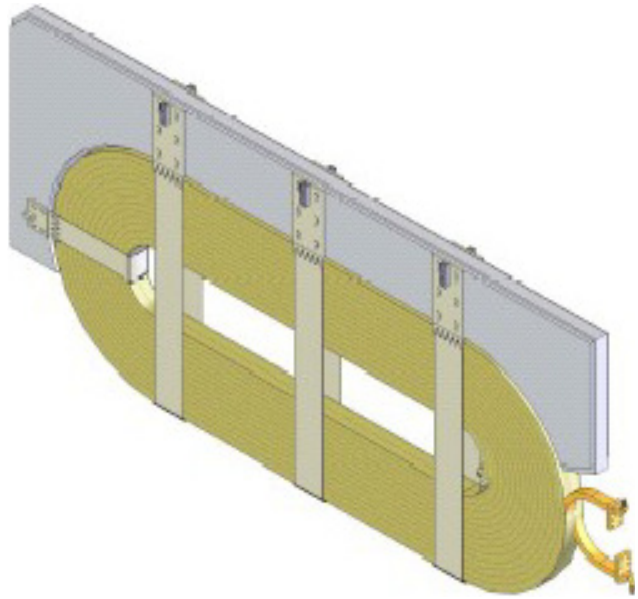

Fig. 291. Single coil arrangement for the Qweak spectrometer.

Magnet Measurements

Experiment 614 – TWIST

The first part of the year was occupied surveying the TWIST solenoid in M13. Measurements were carried out from the upstream end of the solenoid to the quadrupole (Q7) in front of the solenoid.

TOSCA 3D simulations have previously been carried out for the TWIST magnet. These simulations provide important information because the measurements provide only one component (B_z) of the field at a limited number of space points. By contrast a good TOSCA computer model can provide the three field components at any point in space. A detailed comparison was made between field maps taken for the TWIST solenoid, at a field of approximately 2 T and the TOSCA predictions. Within the TWIST iron box (i.e. ± 147.2 cm from the centre of the solenoid) the maximum discrepancy between the predicted and measured B_z field is 20 G. Upstream of the TWIST magnet the discrepancy between predictions and measurements increases: 220 cm from the centre of the solenoid the predicted B_z field is approximately 70 G less than the measured field. 106 cm from the upstream end of the TWIST iron box there is a quadrupole (Q7) that contains a significant quantity of iron; a further 54 cm upstream there is a second iron core quadrupole (Q6). A further 74 cm upstream is a dipole that has an estimated weight of approximately 18 tonnes. The iron associated with the two quadrupoles and dipole would act to increase the field at the upstream end

of the magnet and could therefore explain the discrepancy between measurements and predictions. A revised TOSCA 3D model, which includes the iron of the 2 quadrupoles and dipole, is currently being set up.

Other magnets

Other magnets surveyed this year included a HiTime superconducting solenoid from M15, the Strovink solenoid, twenty ISAC-II transfer line quads, an ECR source magnet assembly, the M20Q1 and Q2 replacement quads, an ISAC S-bend quad, eight ISAC-II double steering magnets, and an ISAC-II 9 T superconducting solenoid.

KICKERS

NLC collaboration

The Kicker group is collaborating with kicker experts at SLAC carrying out research into the application of high power insulated gate bipolar transistors (IGBTs) for high efficiency, high reliability, and low cost pulsed power modulators for the Next Linear Collider (NLC). The IGBTs are stacked in series, with a voltage of approximately 140 kV dc per stack. Under normal conditions the IGBTs conduct 3 kA current pulses for 3 μs, but under fault conditions the IGBTs may have to conduct currents of 6 kA or more. IGBT modules from EUPEC, a German manufacturer of power electronic devices, were frequently failing at SLAC under fault conditions (see Fig. 292). These EUPEC modules contain sixteen IGBT dies, two of these dies are referred to as "A" and "B" as shown in Fig. 292. When the damaged IGBT modules were opened, it was found all of the observed failures occurred in the B dies; these dies are closest to the emitter. Observations on the failed units suggest that the failures might be the result of unbalanced lead inductances within the IGBT package.

The approach adopted at TRIUMF to understand the failure mechanism is to derive an equivalent circuit of the layout of the IGBT, primarily the parasitic inductance (Fig. 293), and simulate the equivalent

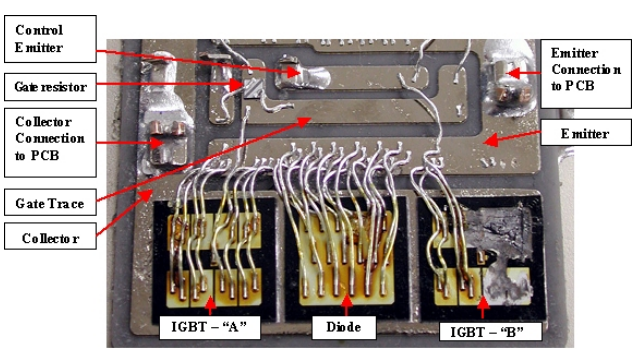

Fig. 292. Lower half of one EUPEC IGBT "raft".

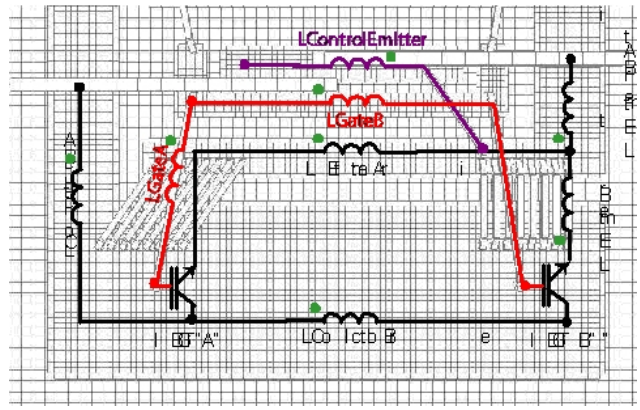

Fig. 293. Extracted inductors and node locations for EUPEC IGBT module.

circuit using PSpice. A 3D electromagnetic code has been used to extract both the self and mutual partial inductances for the layout of both a EUPEC FZ800R33KF2 module and a SLAC designed rectilinear layout. An NSERC research grant was received to carry out research into the high power IGBT switches. Two co-op students have worked on this research project at TRIUMF during 2003.

The EUPEC and a SLAC IGBT have each been simulated under normal working conditions as well as hard and soft short circuit conditions. The PSpice simulations show that the current is well balanced between the IGBT die under normal operating conditions. However, under fault conditions there can be a significant imbalance between die A and B in the EUPEC module. Figure 294 shows a prediction for die A and B in the EUPEC module under soft short circuit conditions: IGBT die B, which is the die that generally failed at SLAC, conducts significantly higher current than die A. Simulation results also show that the proposed SLAC rectilinear IGBT module exhibits well balanced current between the die.

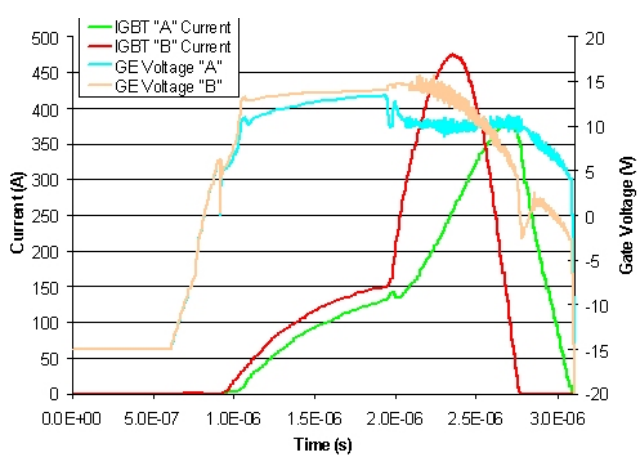

Fig. 294. EUPEC current imbalances and corresponding gate voltages: soft short circuit.

J-PARC collaboration

The Japanese Hadron Facility (J-PARC) includes a ring in which the beam is accelerated from an energy of 3 GeV to 50 GeV. One of the proposed experiments, which require the beam to be extracted from this ring, is the long baseline neutrino oscillation experiment. Space constraints in the lattice of the ring result in a requirement for a novel bipolar combined function kicker that can be used for fast extraction or abort. Magnetic field pulses with a rise time of approximately 1.1 ms and 4.3 ms flat top duration are required. One of the stringent design requirements of the extraction system is a flat top ripple of less than ± 1. The proposed kicker system is composed of 6 kicker magnets of 1.5 m length each, powered by pulse forming lines (PFLs). To achieve the required kick angle of ± 5.32 mrad, low characteristic impedance has been chosen. Several different concepts for the kicker system have been considered including system impedance, and kicker magnet type (transmission line, lumped inductance and hybrid-transmission line). The conclusion of the research was that a 5 Ω lumped inductance magnet with capacitors, or either a 4 Ω or 5 Ω four-cell hybrid magnet meets the specifications while avoiding the complexity and expense of a transmission line magnet. For the HV cable to be reliable for both thyratron and IGBT switches, the cable should be rated for at least 68 kV and 56 kV pulsed for 5 Ω and 4 Ω systems, respectively, with a voltage gradient of not more than 9 kV/mm.

Thyratrons will initially be used for the switches of the kickers. It is planned to carry out research and development work at TRIUMF to build an IGBT switch that can be used to replace the thyratron switches. The IGBT switch will improve the reliability and reduce the maintenance required.

PSI MuLan collaboration

An international collaboration plans to measure the lifetime of the muon to a precision of 1 ppm. The MuLan experiment will take place at PSI in Switzerland. The central idea employed in MuLan invokes an artificial time structure on an otherwise dc beam. The MuLan method requires a fast beam line kicker, which can turn the beam on and off at a repetition rate of up to 75 kHz. The TRIUMF Kicker group was contracted to design and build the kicker. The kicker runs with a standard "on-off time cycle", or in a "muon on request" mode. The MuLan kicker consists of 2 pairs of deflector plates mechanically in series, driven by 4 FET modulators. Each pair of plates is 0.75 m long. One plate of each pair is driven by a +12.5 kV FET based modulator and the other plate is driven by a −12.5 kV modulator. The potential difference between a pair of deflector plates is variable up to 25 kV. Each modulator consists of two stacks of FETs operating in push pull mode. The specifications for the kicker demand that the rise and fall times of the deflector plate voltage are not more than 45 ns; rise and fall times of 40 ns or less were achieved. There is a requirement for an adjustable output voltage from 0 V to ± 12.5 kV per deflector plate, a minimum pulse duration of 200 ns (160 ns achieved), and adjustable repetition rate up to a maximum of 75 kHz (77 kHz achieved), continuous. In addition, short turn-on and turn-off delays of 200 ns were achieved. A novel concept was developed for the design of the MuLan kicker; a PCB containing a 1 kV MOSFET, high-speed driver, power supply and fibre optic receiver has been developed. The printed circuit board layout for this design is very critical due to the fast switching times (<2 ns on the board) and the presence of kV transients that could otherwise be superimposed on low voltage fibre optic control voltages (5 V). The kicker was successfully commissioned at PSI in July (Fig. 295). However, as a result of the very fast switching times of the MOSFETs (<2 ns compared with approximately 30 ns in the previous generation of our kicker cards), and the interconnection required for the 4 kicker racks, significant rf noise is generated. It is planned to ship the kickers and deflector plates to TRIUMF in early 2004, to investigate and implement measures to reduce the rf generated noise.

Fig. 295. MuLan kicker racks installed in beam line at PSI.

One co-op student worked on this project at TRIUMF during 2003. A very similar kicker is required at TRIUMF as part of the Five-Year Plan for M20 upgrade.

Electromagnetic software

The extraction of parasitic inductance and capacitance for both the IGBT project and the MuLan kicker

required the use of 3D electromagnetic software. However, the TOSCA software used is not presently suitable for extracting partial inductances or capacitances. In addition the TOSCA 3D simulations for the TWIST magnet require a considerable amount of computer memory (>1 GB) to simulate only one-eighth of the geometry; at least one-quarter of the geometry is finally required to be modelled. Hence other electromagnetic software codes have been evaluated. The codes from a Canadian company, Integrated Engineering Software (IES), have been extensively tested for their ability to calculate partial inductance, and the code has proven to be both versatile and accurate. The IES codes may be much more efficient for simulating problems such as the TWIST solenoid: it is planned to simulate the TWIST solenoid in early 2004.

MECHANICAL ENGINEERING

Mechanical engineering work at TRIUMF is initiated by the submission of a Request for Engineering (REA) form which is assessed and assigned according to the size, complexity and schedule of the task. Large, complex tasks usually require a team approach guided by a project engineer. The ISAC-II superconducting accelerator refrigeration system and cryomodules fall into this category.

During the year there were 37 ISAC REAs and 30 non-ISAC REAs submitted, along with a number carried over from the previous year.

As in the past there was continuous participation of engineering personnel in performing engineering analyses, consideration of safety related issues, design reviews, and other ad hoc engineering related small jobs.

ISAC-I

Modules

Work recommenced on target module 4 (TM 4) which had been previously built to house a special high power target for tests conducted in December, 1999 (100 μA tests). For those tests the module was incomplete and did not have the normal internal components. TM 4 will be completed as a fully serviced module able to accept a surface source or an ECRIS. However, it will initially be used as a special target development test module later in 2004. Completion is scheduled for the summer of 2004.

ISAC-II

TRIUMF is building a superconducting linear accelerator to be installed in the ISAC-II accelerator vault. The first phase of the project involves manufacture, assembly and construction of the 5 medium-beta cryomodules (and eventually 2 of the 3 high-beta cryomodules) and the refrigeration system necessary to support their operation. Phase 1 of the refrigeration system will be a 500 W at 4.5 K system based on the heat load of the phase 1 components plus distribution losses with a suitable margin. Phase 2 is not at the present time completely defined but will include an addition to the refrigeration system as well as completion of the high-beta cryomodules.

Refrigeration system

A specification was written for the phase 1 refrigeration system as a complete turn-key system. This included everything up to the delivery and transfer of "U" tubes at the cryomodules. TRIUMF was responsible for all services necessary to support the refrigeration system. The two major suppliers of cryogenic refrigeration systems, Linde and Air-Liquide, responded to the tender package with a quotation. Unfortunately both quotations were beyond what TRIUMF had budgeted. At that time TRIUMF decided to negotiate with both tenderers asking for quotations for the supply of the refrigeration system components only, including process and instrumentation diagrams, installation instructions, etc. Quotations were received and a contract was awarded to Linde in November. TRIUMF will be the project manager for the refrigeration system which can be broken down into 3 categories:

1. Refrigeration system component installation including all services, warm piping and buffer storage tank.
2. Accelerator vault access platform and distribution system support structure.
3. Cryogenic distribution system (all vacuum jacketed, liquid nitrogen shielded piling from the liquifier cold box to the cryomodules, including the liquid helium dewar).

The third item is the most complex and specialized (other than the refrigerator itself), and a task force was formed to discuss how TRIUMF would approach the design, purchase and installation of such a system based on the simplest and most cost effective system but also one that has as high a transmission efficiency (low heat load on helium) as possible. To this end a conceptual design was produced, flow schematics were created and a package of information was put together along with a letter requesting interested parties to respond early in 2004. The intent is to have a complete phase 1 refrigeration system operational and commissioned by April, 2005.

Cryomodules

A complete description of the medium-beta cryomodule was presented in the 2002 Annual Report and will not be repeated here. The design was well under way by the beginning of this report period and drawing

release began in March. The vacuum tank arrived in May, followed by the lid and the internal components such as the helium reservoir, support beam, struts and solenoid mounting frame.

The μ-metal was ordered for all 5 medium-beta cryomodules, however, it was not flat and was outside of our required tolerance. This required return of the shipment which was reworked to specification. A μ-metal liner was then produced that was installed adjacent to the inside vacuum tank wall. At the same time work commenced on the liquid nitrogen thermal shield box. The box is constructed of 0.125 in. copper sheet with copper tubes soldered in an array on the inside surface of all sides by a special fluxless solder procedure prior to the box being riveted together. There is a separate lid mounted thermal shield piece that overlaps the edges of the box when finally installed.

An assembly frame was constructed to support the lid and allow the installation of all the internal components. The helium reservoir mounts to the stack flange of the lid (see Fig. 296) and all other components are suspended from 3 adjustable mounting lugs on the lid. This allows for cryo element alignment adjustment relative to the vacuum tank. The assembly frame also mimics the vacuum tank beam ports and wire position monitor ports allowing cryo elements to be aligned with respect to each other as well as the theoretical beam line, and this alignment is also transferred to 3 target posts on the lid since the beam ports will not be visible once the cryomodules are installed in the accelerator vault.

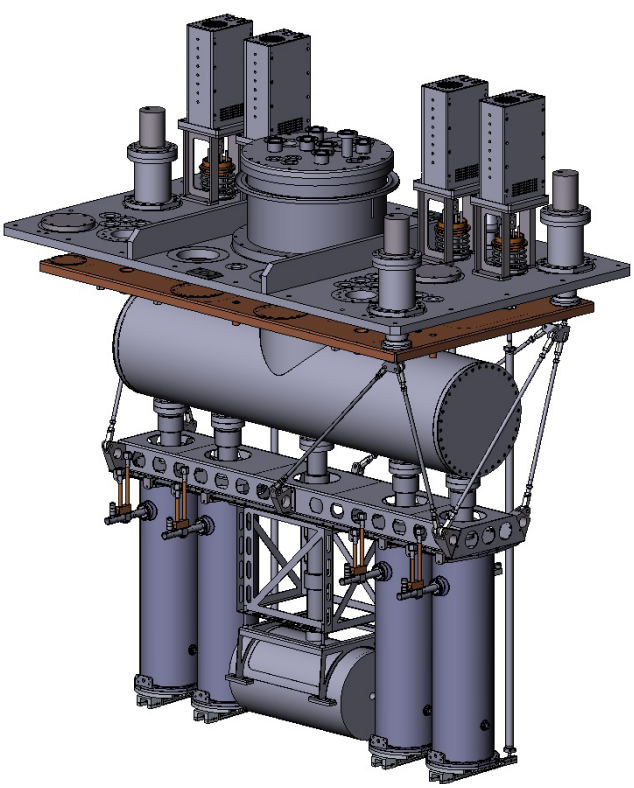

Fig. 296. Cryomodule lid assembly showing internal components.

Assembly has progressed to the point where the assembly frame and internal components had been through the cleaning cycle, moved into the class 3 clean room and reassembled on the frame allowing the commencement of alignment. The vacuum tank and thermal shield box had been moved to the class 2 clean room awaiting completion of the lid assembly. The goal is to complete a cryomodule cold alignment investigation in March, 2004.

ISAC-II single cavity tuner development at BC Research

Numerous rf cavity tests were performed using the tuner under superconducting temperatures. Results were very good and well within the required specifications.

ISAC-II four cavity cryostat tuners

Motor and controller parts were purchased for 4 more cavity tuners. The prototype mechanical design was updated to be commensurable with the lessons learned from the BCR tests. The affected design drawings were updated and all components have been fabricated for 4 cavities and are ready to be assembled. A design for the packaging of 4 control amplifiers, along with all support hardware into a standard free standing electrical cabinet, has been established for the ISAC-II clean room 4-cavity test cryostat tuners. All related parts have been purchased and are presently being assembled.

Structural analysis and approvals

As usual, numerous structural analyses of engineered components were performed and shop drawings approved for manufacture. Beyond that, much analysis was done of the structure of the ISAC-II 4-cavity cryostat assembly components in terms of stresses, deflections, thermal behaviour, and vibration/modal analysis.

Engineering – Other

KOPIO

Scintillator extrusion Work continued from the previous year to extrude wider cross section scintillator with more holes in the middle plane. We successfully produced a $\frac{3}{8}$ in. $\times$ 3 in. cross section scintillator with 6 holes in the middle plane compared to a $\frac{1}{2}$ in. $\times$ $1\frac{1}{4}$ in. cross section version containing 3 holes produced last year. Work is continuing to improve the external profile and shape of the holes in the scintillator.

Fig. 297. Scintillator being extruded between the die and the sizer.

Figure 297 shows the scintillator being extruded between the die and the sizer.

Aluminum extrusions As reported in the 2002 Annual Report, an order was placed with a company located in Portland, Oregon, to produce thin walled and tight tolerance aluminum extrusions. The first run looked quite promising. The company had difficulty controlling the flatness tolerances on the base. A straightening jig is being designed to achieve the tight flatness tolerances across the base as well as along the length. The fin thickness and their spacing are within the tolerances.

Structural A finite element program ANSYS was used to analyze the structural strength of the KOPIO preradiator module. Half symmetry was used to analyze one quadrant of the module. The study concluded that the stresses and deflections were low in the structure.

Figure 298 shows a plot of displacements in the half quadrant KOPIO preradiator module.

Other projects

NPDGamma stand The stand structural components and the control system electronics arrived at the LANL neutron science centre in the ER2 area. The stand and controls were assembled and underwent partial testing. During a return visit in September, safety devices were installed on the drive screws along with limit switches and the controls software was updated to accommodate new installations. The prototype control electronics was packaged into a standard cabinet at LANL with

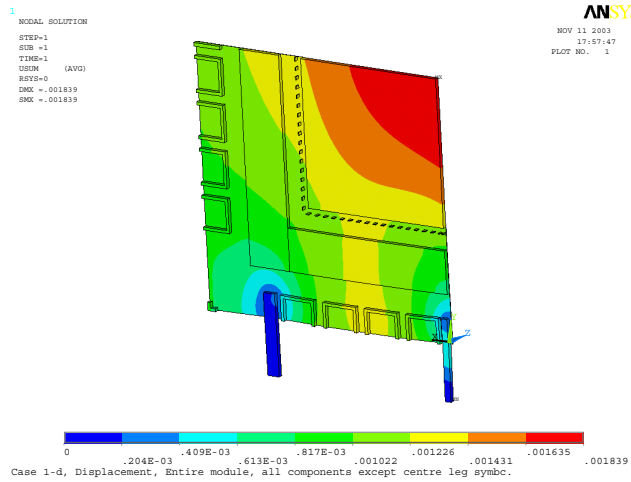

Fig. 298. Plot of displacements in the half quadrant KOPIO preradiator module.

supervision from TRIUMF. Fifty new cesium iodide detector crystals, each weighing 50 lbs, were installed into the detector support module and everything (under full load), remained aligned precisely as required in the specifications.

Engineering – Victoria

Signal feedthrough project

The feedthrough team at the University of Victoria completed their work with the ATLAS feedthroughs at CERN. This included several trips to CERN to assist with the integration of the feedthroughs into the cryostat of the ATLAS detector. The team was responsible for mounting the pedestals, baseplanes, and warm cables, which included the electrical testing for each cable as it was installed.

Hadronic endcap (HEC) module assembly table

There has been continuing support for the manipulation of the second to last HEC module for the ATLAS detector at CERN. During a trip to CERN, TRIUMF staff from the University of Victoria assisted by preparing assembly fixtures and alignment hardware, organizing floor space and equipment storage, as well as other supportive work to carefully move and manipulate the module to its final storage position. There was also some participation in loading the assembly fixture with the final batch of HEC modules.

ISAC target development

Effusion oven The University of Victoria became more involved with ISAC's target development group by researching and designing a high temperature effusion oven capable of reaching 2300°C. This included the development of a graphite filament, construction of a water-cooled vacuum chamber, temperature monitoring thermocouples and radiant heat shielding, as

well as the use of finite element analysis using ANSYS software to confirm the results achieved during testing. This apparatus will be used to test the out-gassing properties of materials at high temperatures for future consideration in target use.

Finned target model Efforts to expand the finite element analysis of the prototype finned target are continuing. Initially, only small sections including one or two fins could be modelled at one time. The model has been expanded to include 45 fins, showing half of the beam tube for the target; however, software limitations were restricting the results of the thermal distribution through these components. Improvements to this analysis are ongoing, and will carry on in 2004.

Heat shield analysis The new design for the ISAC target heat shield needs to have the cooling capacity to remove up to 25 kW of radiant heat being transferred from the target. Calculations were performed to determine the maximum rise in cooling water temperature. This change in water temperature was broken down into increments along the cooling line, and the heat distribution in the heat shield was simulated using Maple software. An iteration to determine a more realistic temperature distribution through the cooling lines is under way and will be compared to a finite element analysis model produced in ANSYS.

ISAC-II – medium-beta accelerator design

In 2002, calculations were done to size the burst disc required for the medium-beta cryomodule helium reservoir and cavities in the case of a vacuum failure and/or solenoid quench. These calculations were adapted for the solenoid test cryostat to confirm the system could safely handle the pressure build up of vapourized helium from a catastrophic event.

In the event of a solenoid quench, the cavities of the medium-beta cryomodule would be subjected to a force causing a bending moment. Calculations were used to show the inner and outer cavity walls could withstand such a force without buckling and causing damage.

T1 and T2 target stations – Be targets

There were questions regarding how much beam current the beryllium targets at the T1 and T2 target stations could be subjected to, and what changes would be necessary to the target design in each case in order for the targets to last two years while being subjected to beam currents as high as 200 μA. Research based on previous calculations for these targets and current operating conditions has begun and will continue in 2004.

Graphite removal

The removal or sale of the excess graphite blocks and plates taking up valuable space at the University of Victoria was completed after considerable effort. Some of the blocks and sheets of graphite had been submerged in salt water for geomagnetism experiments, and were leaching salt. The graphite was sorted into three categories: no obvious salt contamination, minimal or surface only salt contamination, and moderate to significant salt contamination.

Most of the uncontaminated graphite was sold and shipped to the Indiana University Cyclotron Facility (approximately 4.5 tons). The remainder of the uncontaminated graphite, as well as some of the stock with minimal salt contamination, was shipped to TRIUMF for storage (approximately 2 tons).

Engineering – Carleton

ATLAS forward calorimeters (FCAL)

In April, the FCAL 3A module was completed and shipped to CERN, using the reusable shipping crate that carried the 3C module to CERN. Once there, it was tested with 500 V to locate any shorts that shipping might have caused.

The FCAL 3C module was used in a calibration beam test in July and August. After a final cleaning and checking for shorts it was assembled with the FCAL 1C and 2C modules and the Plug3 into its aluminum support structure. As there is only 1.5 mm of clearance between the modules and the tube, this operation took about a week of preparation and alignment.

A detailed heat flow study of the FCAL structure was undertaken to establish an upper limit of heat leakage, into the FCAL through the inner bore, that could be tolerated. This involved complex 3 dimensional FEA models of the heat flow through the various materials, including, in conjunction with the University of Alberta, the convective heat transfer effects of the liquid argon.

Figure 299 shows part of the FCAL assembly.

TPC electronics

A transparent 4-point sensing device was designed and built at Carleton for accurately measuring the surface resistivity of resistively coated films used to increase the accuracy of GEM readout pads. The sensor has spring loaded pins to maintain positive, even contact with the film. The fact that the sensor is transparent allows the operator to use a grid placed beneath the film to get an accurate map of the resistive quality of the film.

Fig. 299. FCAL C end assembly starts.

PLANNING

This year the Planning group was involved in planning, scheduling, coordinating and expediting several sub-projects for ISAC-I (ECR source and upgrades to 8π and β-NMR); ISAC-II (medium-beta cavities, wire position monitor, cryogenics system, high-beta cavities, charge state booster (CSB), HEBT transfer, H-HEBT); planning and coordinating activities for two shutdowns (December 22, 2002–April 15, 2003 and September 18–October 4); ISAC experimental facilities (TIGRESS, TITAN); two step target, actinide target test, and M20Q1,2 refurbishing. The Planning group was also extensively involved in preparing manpower and cash flow estimates for the Five-Year Plan (2005–2010), as well as setting up a new job recording system for the Machine Shop.

Technical details and progress on PERTed activities are described elsewhere in this report under the respective principal group. However, following is a summary of the main projects along with the major milestones achieved.

ISAC

Various plans and PERTs were prepared and updated regularly with manpower estimates and analysis to identify critical areas and resolve any problems. ISAC priorities were evaluated and higher priority was assigned where necessary to optimize the scientific output.

ISAC-I

ECR source ECR design improvements were made after tests with stable beam from the ECR-1 installed on TM 3 in late 2002. Two exit modules were damaged due to high current and absence of proper skimmers. Then skimmers with current limits and cooled collimators were installed, insulators were changed, and the aperture was reduced from 5 mm to 3 mm. Tests were done first on the test stand, followed by tests with stable beam and then with RIB in April, but still the efficiency and amount of RIB delivered was less than expected. After analyzing the test results, the design was modified and ECR-2 was fabricated and tested extensively on the test stand.

Experimental facilities Several modifications and upgrades were made to 8π and β-NMR during 2003.

ISAC-II

Medium-beta cavities The major milestones achieved included: cavities #1–9 were fabricated, inspected, chemically treated and received at TRIUMF. Cavities #10–20 were fabricated and received at TRIUMF and are expected to be chemically treated by May, 2004. Tuners, coupling loops and amplifiers for the first two cryomodules have been received, with the remaining components expected to arrive early in 2004. The first cryomodule tank was received in July; all the internal components were fabricated and assembled in the tank by early December. A cold alignment was achieved with the wire position monitor before year-end.

Cryogenics system It took much longer to prepare the specifications for the cryogenic system including the distribution system. After receiving the bids in October, it was decided that the distribution system would be designed, procured and installed by TRIUMF with help from outside contractors, to meet budget constraints. A detailed Work Breakdown Structure (WBS) and PERT was developed for this project. The contract for the cold box, compressor/ORS and He ambient vapourizer was awarded in November to Linde. These components will be arriving at TRIUMF in July and September, 2004.

High-beta cavities Preliminary physics specifications for the high-beta systems were done with an aim to complete the conceptual design by July, 2004 and order Nb for all high-beta cavities in April, 2004.

Charge state booster (CSB) The CSB system, matching sections and analyzing magnet were installed. ECR mode and breeding mode were commissioned by the end of November. Tests with the rf cooler will take place in summer, 2004, and optimization will continue until the end of the year, when the CSB will be ready to move to its final location.

HEBT transfer The 4 dipoles were designed and ordered in November and are expected to be received in July, 2004. All 20 quads were received and field mapped by July. Eight steering magnets were assembled and field mapped by December, and will be ready to install

by March, 2004. The rebuncher was received at TRIUMF in March, and assembly of the components on to the rebuncher continued with an aim too be ready to install in the DSC line by July, 2004.

Experimental facilities Work breakdown structures and detailed schedules were developed for two major experimental facilities – TITAN and TIGRESS together with some manpower planning and analysis.

The major components of TITAN included: RFQ cooler, EBIT, Penning trap, and main platform and services to support the components. The plans for TIGRESS included: design and fabrication of prototype substructure for one detector by April, 2004, and test by June, 2004. The summary of the progress and major milestones achieved is covered under the ISAC Planning section.

Shutdown Activities

There were two shutdowns during the year: the winter shutdown (December 22, 2002–April 16, 2003 for BL1A, and March 13 and 27 for proton therapy and ISAC beam production respectively), and a fall mini shutdown (September 18–October 4).

Winter shutdown

BL1A activities started in early January, with the removal of many shielding blocks from the meson hall to get a head start for shutdown work. The planning and coordination of jobs around 1A triplet and T2 became complex and challenging due to high radiation fields and lack of manpower. A total shutdown dose of 186 mSv was distributed among 123 workers.

Major jobs completed by the Remote Handling, Beam Lines, Vacuum and Diagnostics groups in the meson hall included: replacement of leaking 1A triplet along with rerouting of services for better accessibility, removal of some crumbling blocks near 1AM10 and T2 water package and installation of new custom designed shielding blocks (as needed), repairs of M20Q1 water leaks, repair of several BL1A vacuum leaks (1AQ13, M9Q1-T2, M20Q1-B1), M13 jaws and slits MRO, T1 and T2 target and water packages MRO, and repair of 1AQ9 thermal interlocks.

In the cyclotron vault the elevating jack maintenance was completed by mid-January. After that the lid was up for most of February to complete maintenance jobs for probes (extraction probes (2A, 2C), LE2, MRO on both low and high energy probes, slits and periscopes), and engineering physics (MRO on correction plates in Q2, 4 and thermocouples). The RF group completed several jobs that included: voltage probes calibrations and MRO, inspections and cleaning in the centre region, resonator bellows and chore pads (UQ1), installation of new combiner #2, PA tests and tuning, combiner #3, capacitor station #2 upgrade, and MRO work for transmission line pickups. The Vacuum group installed 4 new ion gauges for rf and also replaced both the inner and outer tank seals (one of the high dose jobs) with the help of volunteers. Some work was also done on 2C to prepare for the removal and reinstallation of STF in the January, 2004 shutdown.

Vault work finished on schedule with the lid down on February 25, main magnet energized on February 28, followed by injection and cyclotron tuning with a beam for proton therapy calibrations on March 13, and beam production for ISAC at ITW on March 27. BL1A beam production was scheduled for April 16.

Fall mini shutdown

This mini shutdown in September was originally scheduled for one week and had to be extended to about 2 weeks because it was decided to raise the lid to replace the water-cooled probe and exchange 2C extraction foils. After 9 days of cool down time and with the south side shadow shields in place, the predicted fields in the area where work had to be done were about 50% higher than last spring. This was confirmed by the radiation surveys done during the shutdown.

Meson hall work started a few days earlier than vault work, when PIF finished running in 1B. The major jobs completed in the meson hall included: repair water leaks at 1A triplet and M9Q5, replace electrical superconducting connectors for M9, repair small air leak at M20 beam blocker, repair water leak in M13 header, upgrade vacuum hardware and install 1A turbo cables. Some work was also done on DB0, target modules MRO, and commissioning of ISAC building services and controls. A total shutdown dose of 28 mSv was distributed among 47 workers.

DESIGN OFFICE

Although the majority of design hours was focused on the ISAC project (58.0% of 16,859), a significant amount of time (26.4%) was devoted to MRO upgrades to the beam line infrastructure, in preparation for future experiments at TRIUMF.

Design of the ISAC-II cryomodule prototype and DSB S-bend HEBT components billed 4,472 hours, equal to approximately 2.4 FTEs. The development of the charge state booster (CSB) to test stand readiness, and the rf cooler prototype for TITAN billed 1,255 hours. The single detector prototype for TIGRESS added 1,063 hours. Upgrades for ISAC target and exit modules, ECR2 for the test stand, low intensity diagnostics, and support for the general ISAC-I experimental program, TUDA, DRAGON, GP2, β-NMR, LTNO and others continued through the year.

TRIUMF's main program MRO upgrades were (a) cyclotron refurbishment: high energy probe replacement prototype, low energy probe cassette re-design, rf

transmission line and power switch upgrades, and cyclotron documentation, and (b) beam lines: 1A triplet, T1/T2 shielding and profile monitor, M9 Q1-2, M9B OMNI spectrometer stand, M11 septum bypass, M13 gate valve and TWIST time expansion chamber, M20 Q1-2 and beam line 2C re-alignment were all visited for experimental upgrade purposes during the year.

External projects received 8.7% of design hours, with most effort concentrated on the MuLan kicker, CERN 66 kV power supplies, SNO glove box and KOPIO.

Photographic and visual art services continue to grow with greater emphasis being given to TRIUMF's image, both within the science community and on the world stage. Publications are more completely processed in house. Instructional aids, models, posters and other materials billed 1,162 hours this year, 60% more than 2002, contributing toward TRIUMF's Outreach Program and corporate presentation.

Network 2D CAD is now available through PC support and SolidWorks 3D modelling software has been adopted as the platform of choice for all TRIUMF users through to the start of the next Five-Year Plan (April, 2005). 90% of the Design Office legacy archive has now been scanned.

MACHINE SHOP

There were several changes in Machine Shop personnel this year. Roland Roper retired after serving as Machine Shop supervisor since 1980. Ivor Yhap is the new supervisor and Andy Hird replaced Ivor as a shift supervisor. Two new machinists were hired, making the present complement 19 technicians and 3 apprentices. One of the new machinists has had considerable experience with CNC machining and the Mastercam software. This experience has already been put to good use with a number of parts being machined using the full capability of the Haas V3 CNC machine with its fourth and fifth axes.

Figure 300 shows an example of the complex components produced at the CNC machining centre.

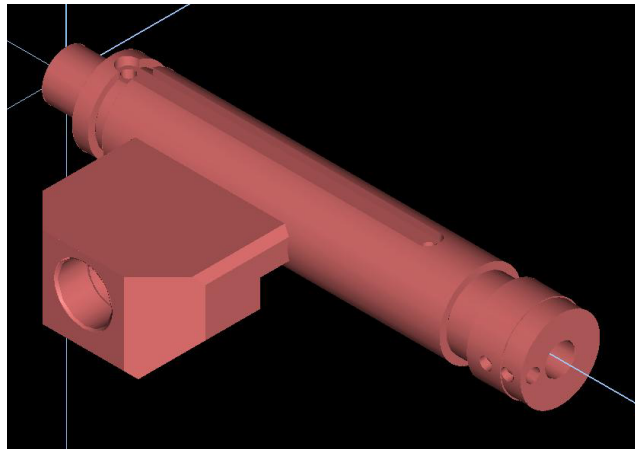

Fig. 300. An LN_2 cooled rf coupler for the SCB cryomodule, machined from a solid piece of copper.

Table XLVII. Machine Shop utilization.

ISAC development	4.1%
Science	26.9%
ISAC operations	14.3%
Nordion	5.1%
ISAC-II	29.8%
Cyclotron	11.5%
Cyclotron refurbishing	2.9%
CERN	0.6%
Affiliated institutions	2.6%
NSERC	0.7%
Site infrastructure	1.1%

The distribution of Machine Shop jobs by TRIUMF divisions and other groups is shown in Table XLVII.

The total value of fabrication work amounted to $1.68 M this year. The Machine Shop continues to support local industries by sub-contracting out work that is beyond the capacity of the shop, or large volume components that are time sensitive in nature.

BUILDING PROGRAM

Design and management of minor construction projects

The department was involved in lots of small projects around the site. Most of these projects were small renovations and adaptations in the new ISAC-II building. Projects like video conference room and clean room 152 were typical adaptation projects.

Structural design and engineering review

Preliminary structural design was done for the mezzanine in the technical shop of the ISAC-II building. Engineering review was performed for a variety of small structures like lifting bridges, platforms, etc.

Building design review

The Building department did the architectural and structural concept reviews for the new TRIUMF House (see Fig. 301). Based on those reviews, some changes to the original design drawings were done in order to improve the construction.

Fig. 301. The new TRIUMF House.

Construction review

The regular and final construction reviews were done for the new ISAC-II facility. Reviews of minor construction projects managed by the department were also done.

Management of maintenance and repair work

During the course of the year approximately $108,300 was spent on maintenance and repair work at various TRIUMF buildings and around the site. This included the annual maintenance and repair contract, interior and exterior painting, and upgrades to the parking lot and the parking lot access road.

Management of landscaping work

This year the Building department took over the management of the landscaped areas on site. This work consisted of the annual landscape maintenance contract and some additional landscape projects.

Drawing library maintenance and services

The department provided services of creating new and issuing existing drawings to many in-house clients. It also continued with organizing and updating the site and buildings drawing library.

ELECTRONICS SERVICES

Overview

Electronics Services had a productive year delivering services and products to the majority of the site. Our jobs run from the simplest cable assembly right up to vision based systems measuring wire chambers. Our services include maintenance of 340 PC systems, repairing a wide variety of electronics, assisting experimenters with specialized controllers, manufacturing special modules for groups, and working on CERN projects. A major project this year was installing the entire network communications infrastructure in ISAC-II. Electronics Services also initiated an Electronics Recycling Program that managed to keep approximately 15 tons of electronics garbage out of the normal waste stream.

Site Communications

Site communications was very involved with installation of the ISAC-II data network for the first 7 months of the year, from planning to consulting, pricing, contracting, purchasing, organizing, installing, testing and certifying. Installation consisted of more than 270 cables, comprising over 60,000 feet in length, providing about 500 data outlets. Savings for the site using our own internal manpower for installation was in the order of $30–60 K. Other work included the consolidation, re-organization and relocation of the data rack in the chemistry annex after the computing centre move to ISAC-II. There were lots of smaller jobs involving installation and reconfigurations for the RF group, Nordion, M15, 8π, Machine Shop and trailer Ss.

Technical Support

Major work for Technical Support this year was the completion of prototype and final versions of two CAMAC modules for the Controls group. These were DSP based 16-bit ADCs as well as the CAMAC power and diagnostic module. We are now supplying these in dozen lot quantities, which will result in substantial savings for the Controls group as well as vastly improved performance. Another job that was complete was the pair of precision interval gate generator modules built for LTNO. The proton therapy fast shutter system required a few revisions this year, and for TWIST the majority of the documentation was completed. TWIST also required the construction of a PLC based control system for their new TEC gas system. Late in the year a project for the support of the ISAC-II cryo tuner motor system was started.

PC Support/Desktop Services

PC Support, also known as Desktop Services, had a very busy year. PC hardware related tasks increased by 50% to 308 tasks. Software related jobs increased by 18% to 327 tasks, and network related activities decreased by 16% to 139. Although a record of the number of consultations provided by way of phone calls or walk-in requests is not maintained, it is likely similar to the previous year's total of 3000 consultations.

In 2003, virus protection migrated to the Symantec AntiVirus solution. This allows better control of the virus outbreaks and ensures that Windows PCs are receiving adequate protection. The installation base on the TRIUMF site has increased from 229 PCs to 340

PCs. A relocation of one of the offices provided a larger and more efficient working space. A project review process was implemented that keeps the group focused on all the tasks on hand. A number of projects are in progress, one being the Novell server NW01-DO, which is aging and should be updated. A review is under way to improve the reliability of this server. Desktop Services is also investigating a volume mirroring system that will eliminate dependency on our aging and out of warranty tape backup unit.

Electronics Repair Shop

By every measure, this was just an average year, with little activity of any special significance in the Electronics Repair Shop. Most effort was devoted to the repair and/or recalibration of a total of 185 electronic devices, including: 27 monitors/terminals (of which 2 were monochrome and the remaining 25 were colour), 70 power supplies (comprising 17 NIM devices, 8 CAMAC devices, 34 high-voltage devices, and 11 other devices), 52 nucleonics modules (including 43 NIM units and 9 CAMAC units), 4 items of test equipment, and 32 other miscellaneous items of electronic equipment (mostly various controllers). Some time was also spent repairing the digital readout/controls for some machines in the Machine Shop, refurbishing high output power supplies for KOPIO, being instructed in the maintenance and checkout of the Sairem microwave power supply and source for the ISAC test stand, and the installation of some communications cabling in the Business Office and ISAC-II.

Electronics Shop

The Electronics Shop had a busy year working on a large variety of projects. As opposed to other years, there was no major project or experiment that required months of continuous assembly or cabling. One of the larger projects supported this year was assembling and modifying thyratron bias boards for CERN. For the Central Controls group, a variety of CAMAC modules were manufactured including the new 0946 ADC boards, 0918 power and diagnostics module, and some 0922 I/O gates to replace older units. A half dozen 4-channel visual scalers were manufactured for the Experimental Support group. A number of popular flow-switch units were assembled.

Experimental and Target Technical Support

Most of the year was spent working on the CERN contribution which entailed the assembly and testing of the switch tanks, uniting these with the PFN units, followed by HV testing and a number of modifications. Another job was working on the MuLan kickers for PSI. Site support went to 1AT1 and 1AT2, and the ISAC ITE for which some repairs were also needed in the thermocouple system. Work commenced on the SCRF cryo tuner enclosure and control system.

High Level Software Support

The year included several projects for a variety of groups at TRIUMF. The TIGRESS DAQ system was built using MIDAS and JACQ, and the prototype detector was successfully mapped. This experience helped in creating a DAQ interface to the TWIST TEC gas handling PLC, which was integrated into MIDAS by porting the EPICS Modicon PLC device driver. Some of this work was presented in a talk and poster at the RT2003 conference in Montréal.

For the μSR group, work continued on solving the M15 separator controls problems, only to be met with a fire in one of the 400 kV power supplies, and a very fast fix with an almost compatible spare. A network based heater controller was integrated into the CAMP system, and the HiTime motor controller was installed in M15 with a user interface based on JACQ. A new motor driver module was developed for the μSR cryostat valve controls, and improvements were made to the driver software. A complete rewrite of the magnet survey system was started, to replace the software running on an obsolete DECStation 5000.

Work in ISAC included installation of new device servers for MIDAS systems, changes in the LTNO DAQ system, the new DRAGON ladder target mechanism, and assisting the experimenters on Expt. 920. Further progress was made in constructing the cavity washer for the SCC of ISAC-II. New motor drivers were designed for the slits and jaws in the ISIS beam line and ISAC CSB beam line. Motor controls were installed in the ISAC target conditioning box.

Some work was done in investigating imaging tools for the KOPIO wire chamber inspection system. This involves image capture, analysis and data extraction.

ELECTRONICS DEVELOPMENT

The ISAC control system installation and design accounted for most of the group's effort again this year. A substantial amount of work also went into developing and building specialized modules for TITAN, as well as the fourth revision of the data acquisition board (DAB) for CERN. A member of the group, as part of the quality assurance task force, helped to develop the TRIUMF QA program. Three members of the group attended the International Conference on Accelerator and Large Experimental Physics Control Systems (ICALEPCS) in Gyeongju, Korea. One co-op student was supervised between February and August.

ISAC Support

The group continued to provide all the hardware installation, maintenance and upgrade support for the

ISAC control system. An additional 30 CAN-bus modules for power supply control were installed in the CSB. With the development of a new VME 8-channel ADC/1-channel DAC module, the VQSX can be replaced for use with the RPMs potentiometer readback, and for emittance measurements.

The relocation of the SCRF test lab from BC Research to the ISAC-II clean room required the system to be disassembled and reinstalled. In addition to the original equipment, five 2-channel heater control modules were designed, built and installed for the ISAC-II cryomodule in the SCRF.

Several specialized modules were designed for TITAN. Four 8-channel ±40 Vdc VME power supply modules will set the trap potential. A second VME module will provide 6 channels of up to 500 Vdc for setting the trap extraction potentials. The timing for controlling the trap and extraction is performed in another VME module. Due to space constraints of the test facility, three rack mount enclosures were built to house the 32 CAN-bus controllers.

A small EPICS/PLC system for a target evaporator was completed.

A test EPICS/PLC system was implemented to monitor an rf amplifier. This system gave us an opportunity to evaluate Modicon's newest I/O modules (Advantys) for ISAC-II.

With assistance from a BCIT co-op student, a module was built for synchronizing the pump laser pulses to the 3 TiSa lasers.

Maintenance activities included repair of malfunctioning components, as well as continued development of procedures and a test facility for TRIUMF built devices. All modules are asseted, recorded and tracked in the new Asset database.

CERN

The digital acquisition board (DAB) entered its fourth revision this year. With CERN's decision to move to VME-64x, considerable modifications were required to support this standard. Additional specifications have also been added to the requirements.

Engineering Support

The group took over the tasks of replacing pressure flow sensors and adding paddle wheel sensors during the rework of T1/T2, when a member of the Electronics Services group fell ill.

The Magnet/Kickers group continued to receive assistance with engineering and prototyping for their PSI kicker. A control card for sequencing the HV stack was designed. Additional control and interlock modules were designed and built for the four rack system. Several iterations of the HV FET module were required, as more knowledge was gained with the system.

Engineering expertise with PLC and EPICS based systems was provided to the Safety group. Technical advice was also supplied to two co-op students with other groups.

Experiment Support

Five high voltage modules along with a test carrier board were designed and built for KOPIO. This module was based on a PSI design.

For the μSR group, an I-μSR NIM logic module was designed. This module will replace the equivalent of more than a complete NIM crate of electronics, and will greatly simplify the set-up of these types of experiments. It is a complementary match to the VME based Gate Logic Board that the group developed last year.

The group assisted in the evaluation of a silicon strip detector as part of a ΔE-E telescope for the DRAGON facility.

Secondary Channel Support

The M15 vacuum system was successfully moved into the BL2A PLC system, allowing the M15 beam line to be fully supported by the EPICS based secondary channel control system. The control of the new M13 jaw was incorporated into the existing M13 secondary channel motor controller.

New Hardware Designs

Several new modules were designed and built:

- A second revision of the water flow monitoring module with CAN-bus readout was built and tested. Two modules are currently installed in T2 and the conditioning station.
- A VME based 8-channel programmable gain normalizing module for the NPDGamma experiment at Los Alamos.
- A VME based frequency synthesizer for generating complex modulated, multi-frequency waveforms for the β-NMR group.
- A module to house the MZ104 IOC along with an Ethernet serial converter forming a cohesive PC104 IOC.
- A non-volatile memory enhancement for the new EPICS VME-x86 based IOC (Mariner).
- A HV switch driver module and a HV switch interlock module for the TiSa laser.

Infrastructure

In an effort to facilitate compliance with QA requirements, the group's Web-based REA tracking system was completely redesigned. It now uses the open-source relational database system PostgreSQL. REAs and associated QA documents can be tracked and relevant information is distributed by e-mail. The group's

written QA procedures are being updated to comply with the TRIUMF standard operating procedures.

A Linux based firewall was added to protect the group's computer network, especially the fileserver.

The group decided to migrate towards the use of Mentor Graphics Expedition for schematic and PCB layout. The current Protel tools do not handle the iterations required with complex programmable logic devices. This move requires a substantial effort in creating libraries of components which had previously been created over the years for the Protel tool.