TRIUMF

Canada's national laboratory for particle and nuclear physics
Laboratoire national canadien pour la recherche en physique nucléaire
et en physique des particules

Francium PNC experiment: Commissioning & S1336

ISAC Science Forum, Sep 26, 2012

Michael Tandecki

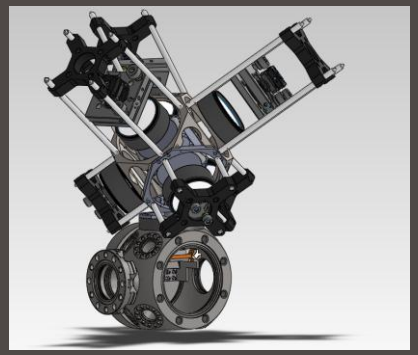

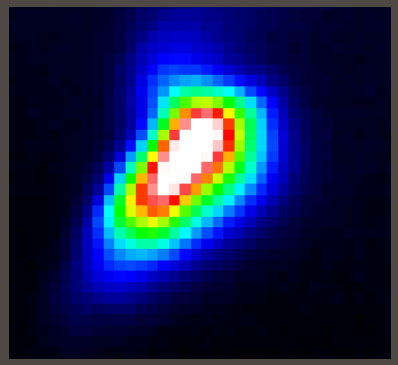

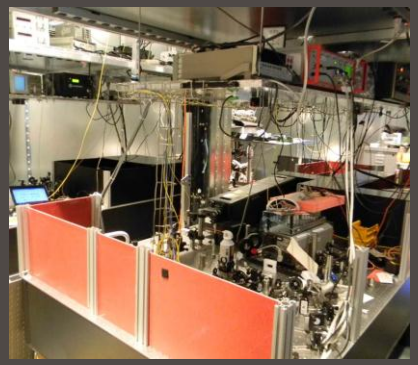

Overview

- The Francium trapping facility
  - Physics goal
  - Experimental setup
- Commissioning of apparatus (related to several proposals)
- S1336: A=225 implantation to generate ^{221}Fr for FrPNC experiments
- Conclusion & Outlook

Physics Motivation

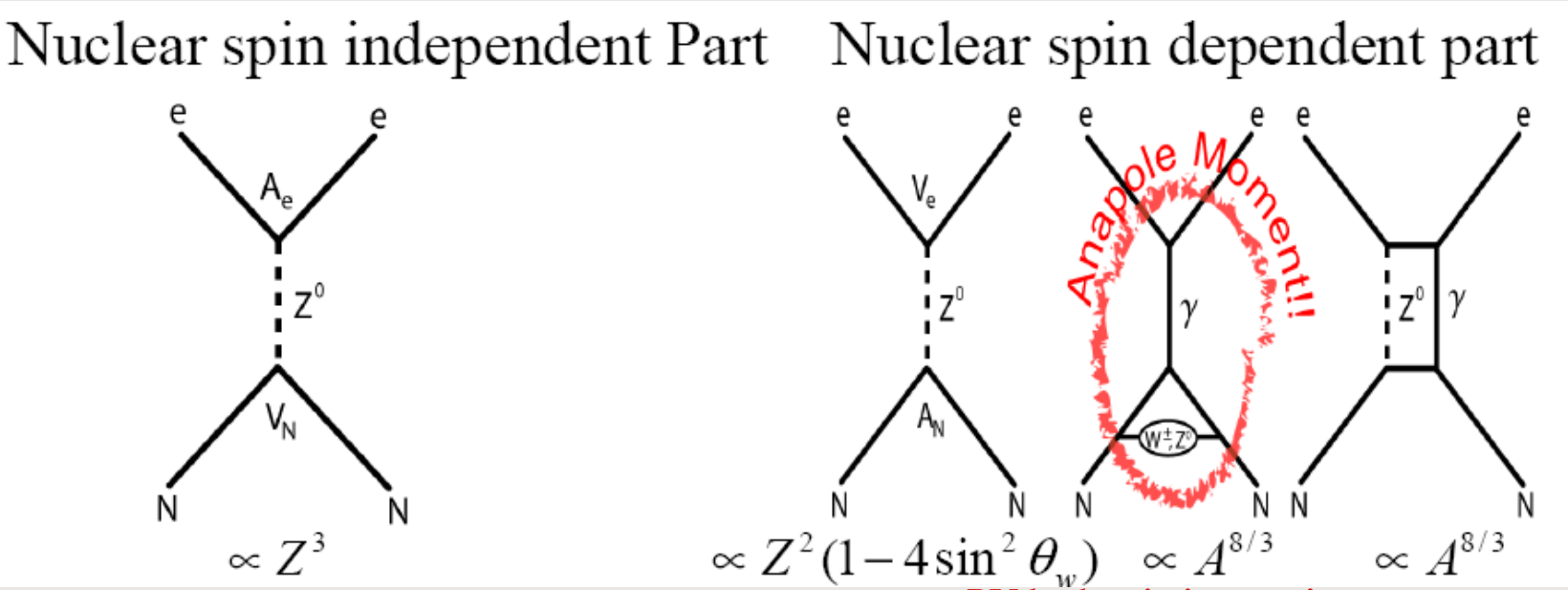

PV hadronic interactions
$\Rightarrow$ PV anapole moment
of the nucleus

NSD Z-exchange

hyperfine correction to
the weak neutral current

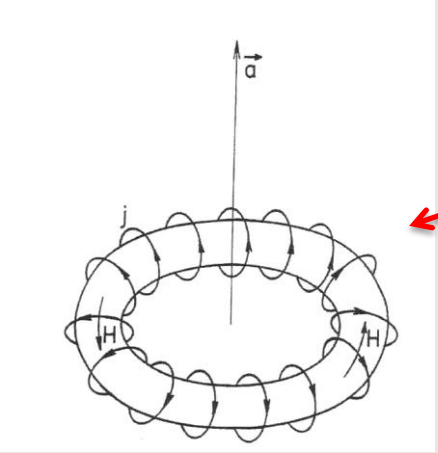

$$H_{\mathrm{PNC}} = \frac{G_F}{\sqrt{2}}\left(-\frac{Q_w}{2}\gamma_5 + \left(\frac{K}{I+1}\kappa_a + \kappa_2 + \kappa_{Q_w}\right)\frac{1}{I}\sigma_n\gamma_0\vec{\gamma}\right)\rho(\vec{r})$$

Planned PNC experiments (S1218 & S1065)

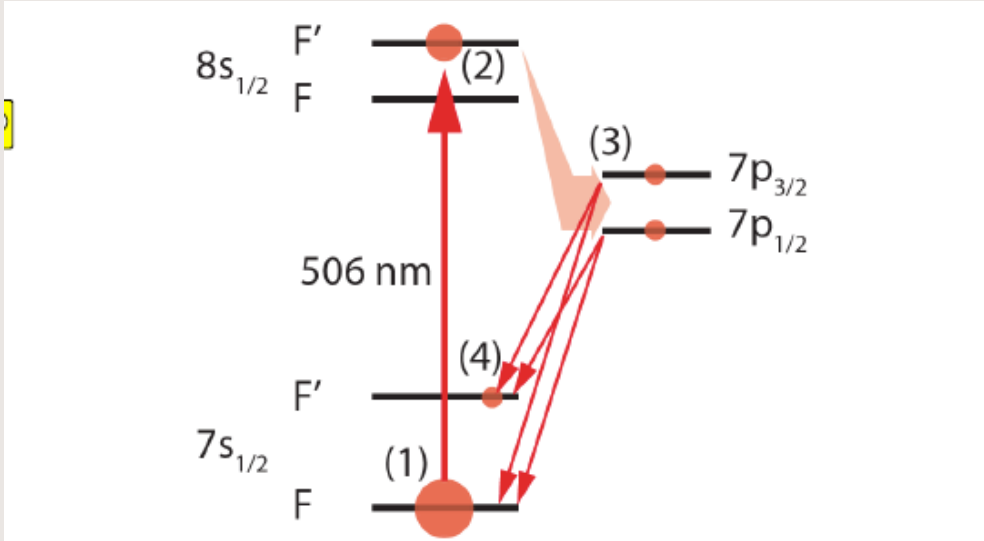

Schematic of the Fr energy levels for optical PNC with the sequence of decays that facilitates recycling detection.

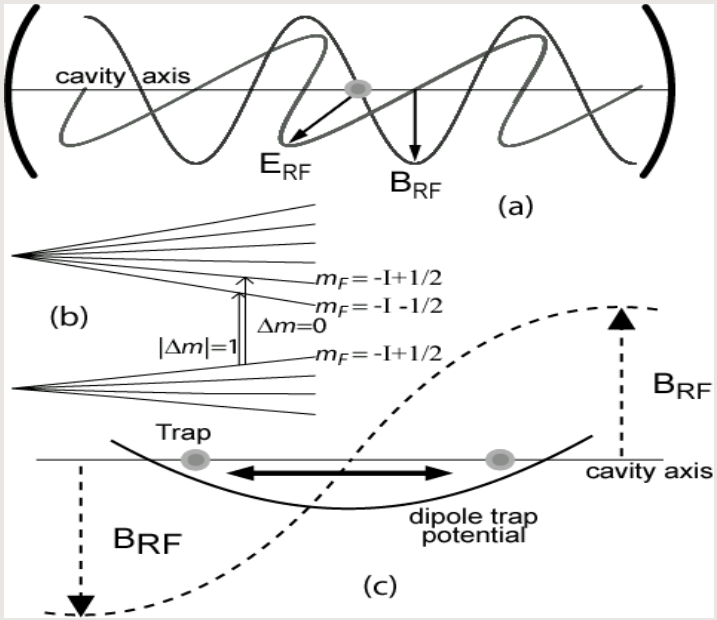

- S1218: Towards an optical parity violation experiment in Fr
- S1065: Weak nucleon-nucleon interaction from nuclear anapole moment

Why Fr?

- Similar experiments have been done in (stable) Cs.
  First detection of anapole moment!
  C. S. Wood et al., Science 275, 1759 (1997)
  'Huge' atomic beams; 10^{13} atoms/s and well-defined interaction regions
- Fr has an enhancement with a factor of ~18,
  similar atomic structure to Cs
  Availability of different isotopes
  Radioactive beams are limited to 10^{7}-10^{8} atoms/s
- Increase statistics by trapping
  -> Magneto-optical trap

Magneto-Optical trap

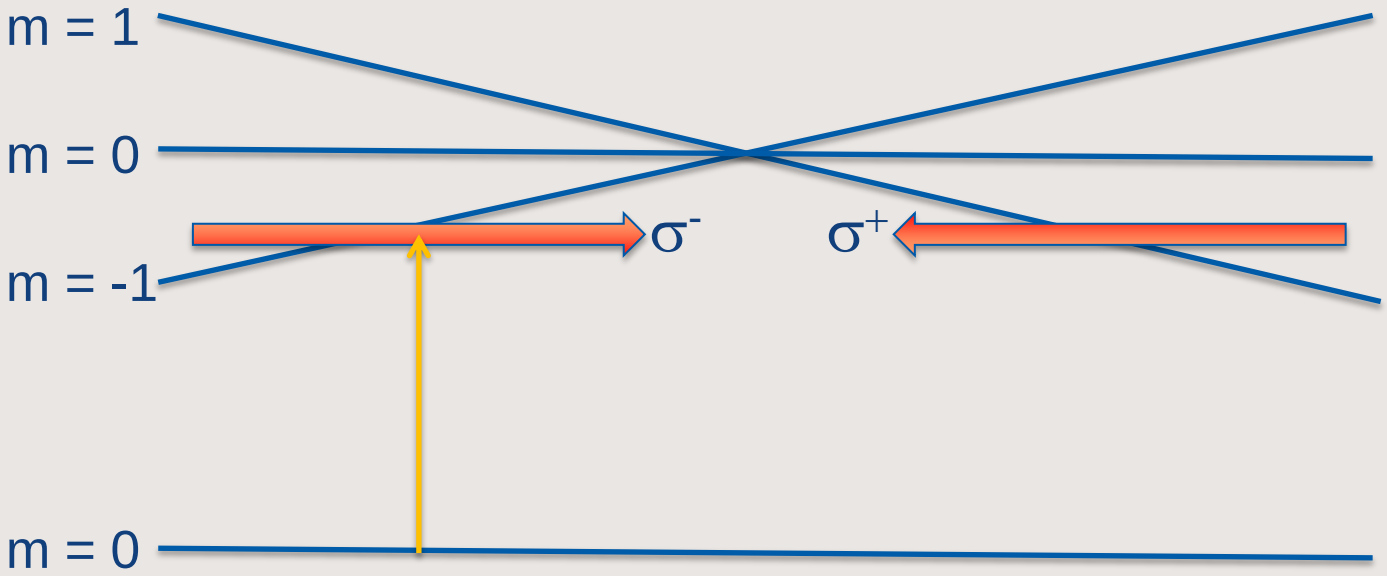

- Position-dependent force through magn. gradient
- Velocity-dependent force through Doppler shift

Set-up

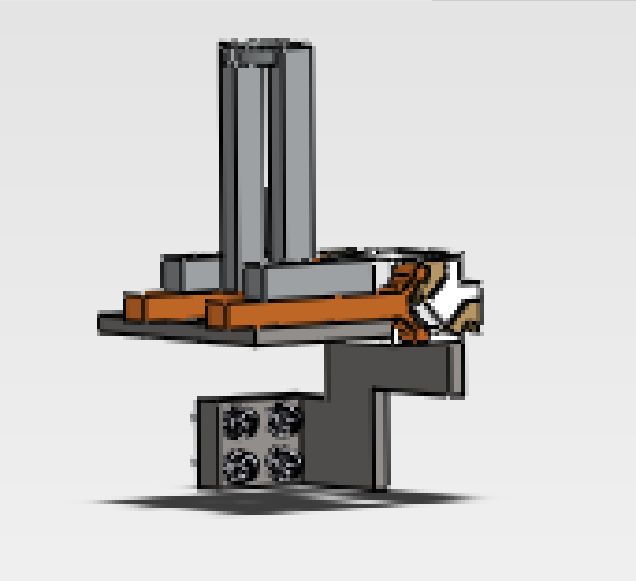

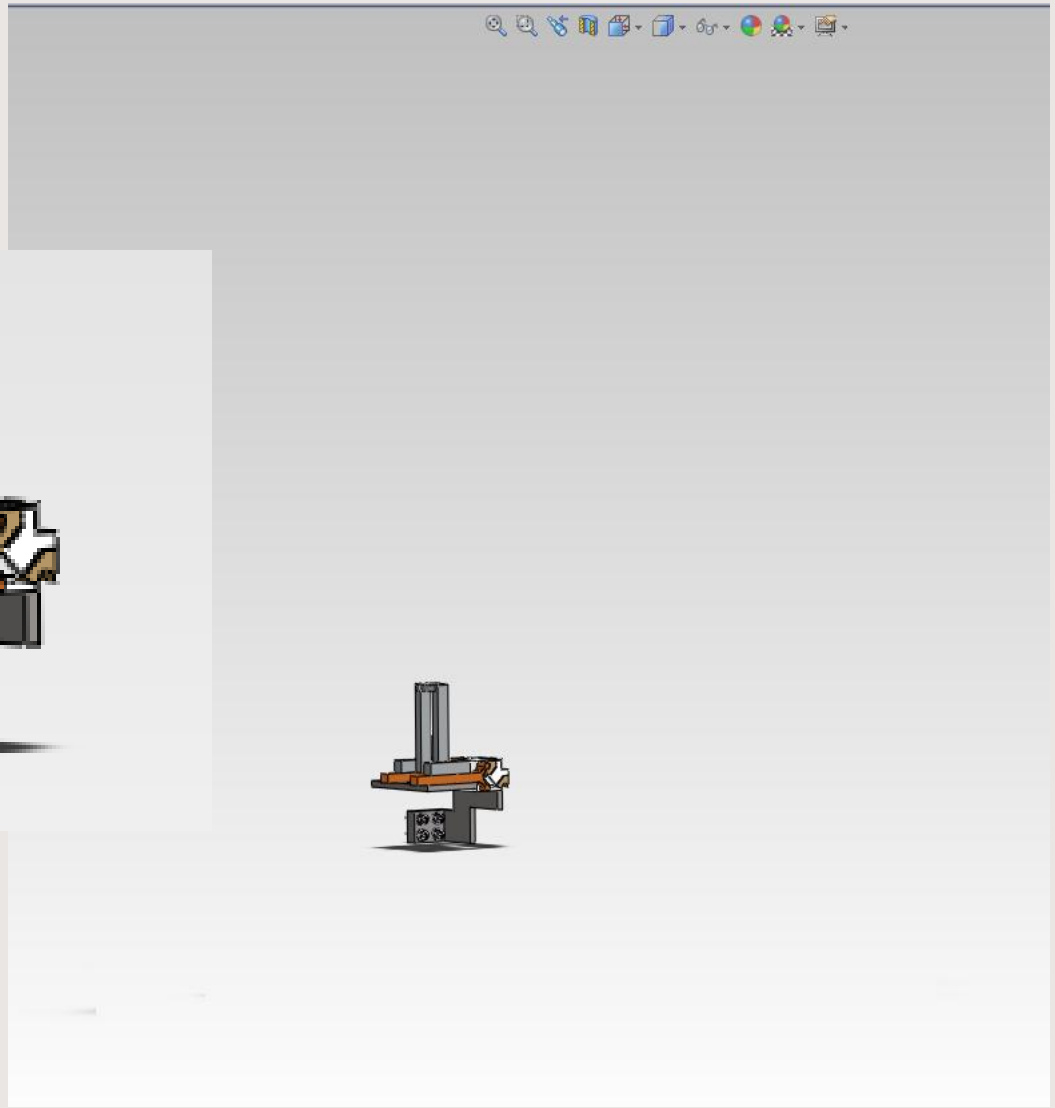

Set-up

Set-up

Set-up

Set-up

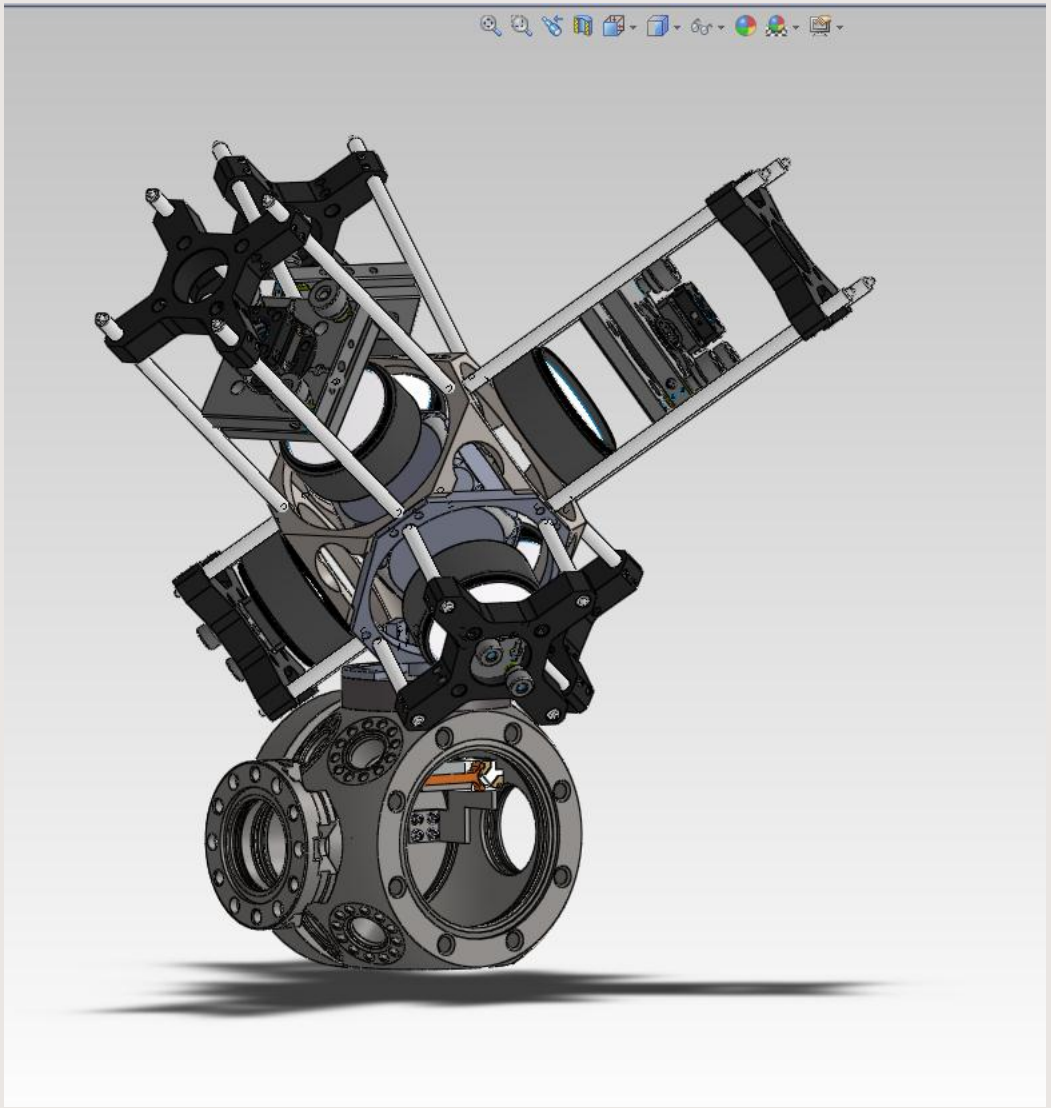

Faraday cup + alpha detector

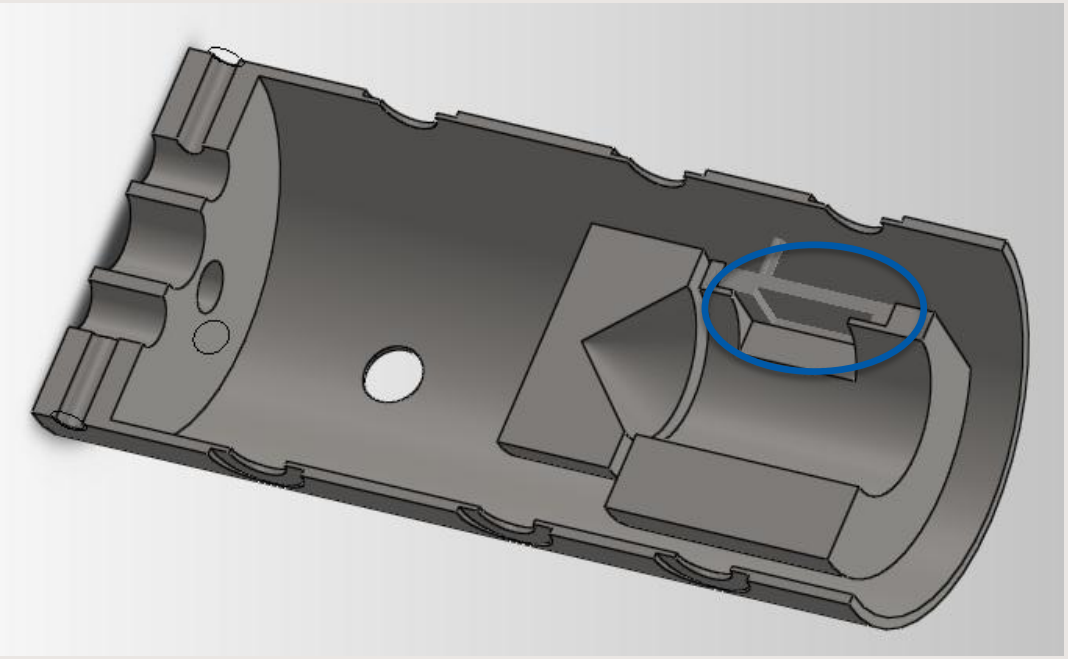

Hamamatsu S3590-09, 1 cm^2 active area, 300 μm depletion layer

Pictures

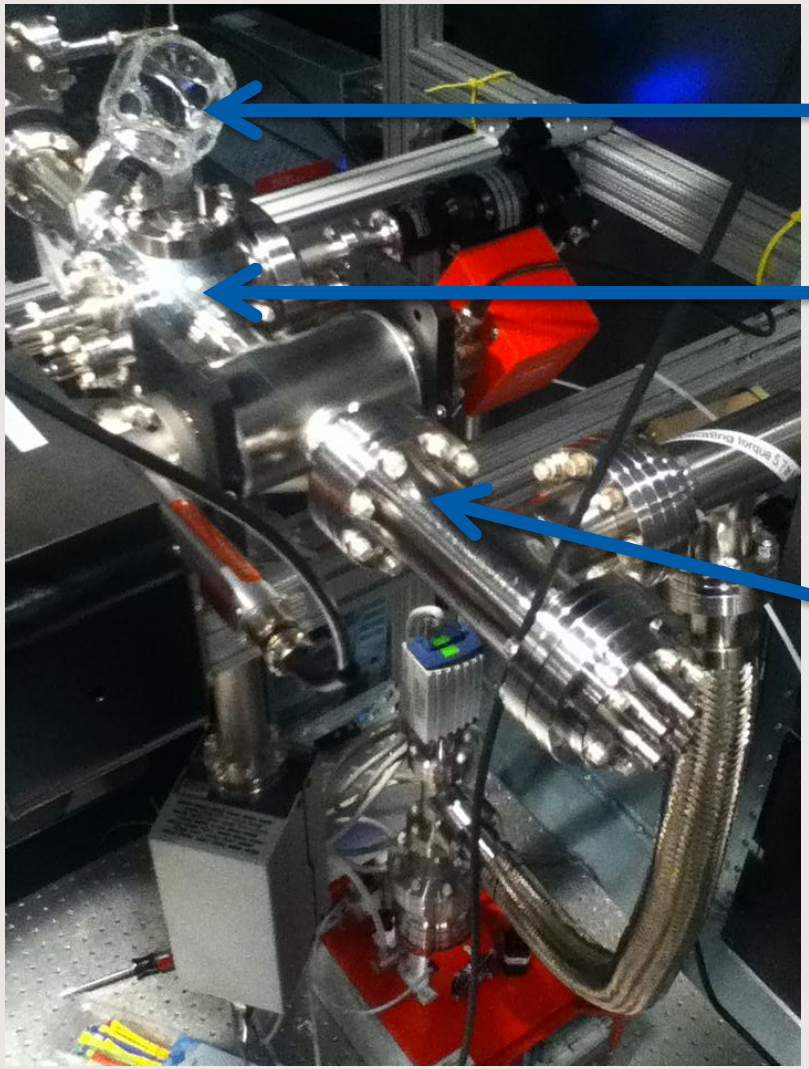

Glass cell

Yttrium assembly

Faraday cup + alpha det.

Recent picture

Commissioning of the apparatus (Sep 2—5)

Overview

- Trapped isotopes:
  ^{207}Fr, ^{209}Fr, ^{221}Fr

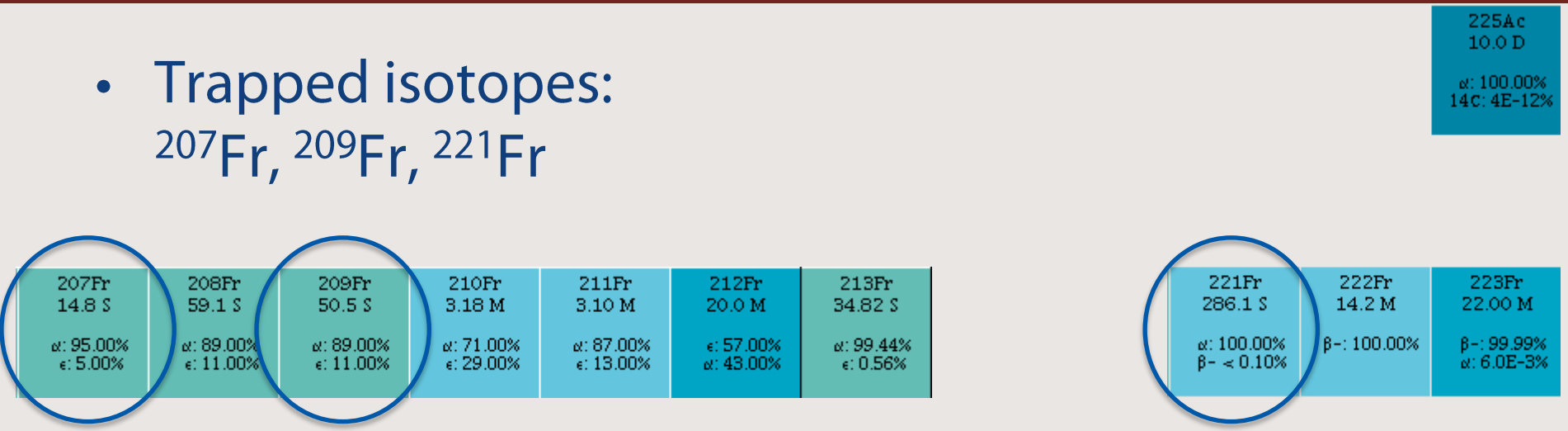

- ^{209}Fr: initial trapping, test
  ^{207}Fr: preparation for physics run
  ^{221}Fr: preparation for S1336
- Hunt for D1 (7s-7p$_{1/2}$) and D2 (7s-7p$_{3/2}$) lines

Atom cloud in motion

Efficiency

Factors to be taken into account:

- Imaging system: solid angle, detection efficiency,…
- Laser light: intensity, detuning frequency, …
- Atom: lifetime levels, line width,..

→ trapping efficiency of 0.05%

solid angle	0.007168444	
quantum efficiency	0.3	
photons/count	10	
exposure time	20	ms
laser power/beam	40	mW
area beams	19.63495408	cm^2
detuning	21	MHz
lifetime	21	ns
Gamma	7.578806814	MHz
Beam flux	3.00E+08	s
Collection time	20	s
Counts in detector	2.00E+06	
Efficiency	~ 0.001	

Problem with commercial laser (which occurred right before beamtime) will improve this already; power + stability

Trap lifetime measurements

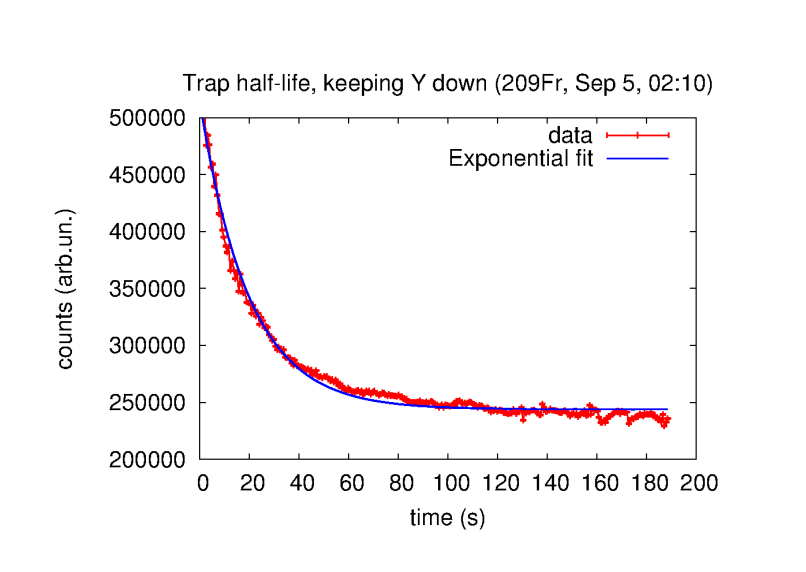

Trap lifetime depends on:

- Vacuum
  -> rest gas collisions
- Density
- Radioactive lifetime

Can deliberately be shortened:
Non-resonant photoionization of $7P_{3/2}$ state at 442 nm
$\sigma = 12 \pm 12$ MegaBarns
(preliminary)

Future optimisations

- Heating of the yttrium foil
- Laser power
  (i.e. fixed laser)
- Dryfilm coating (?)
- Beam tune,
  using atom cloud size as gauge (short test with Einzel lens was done)

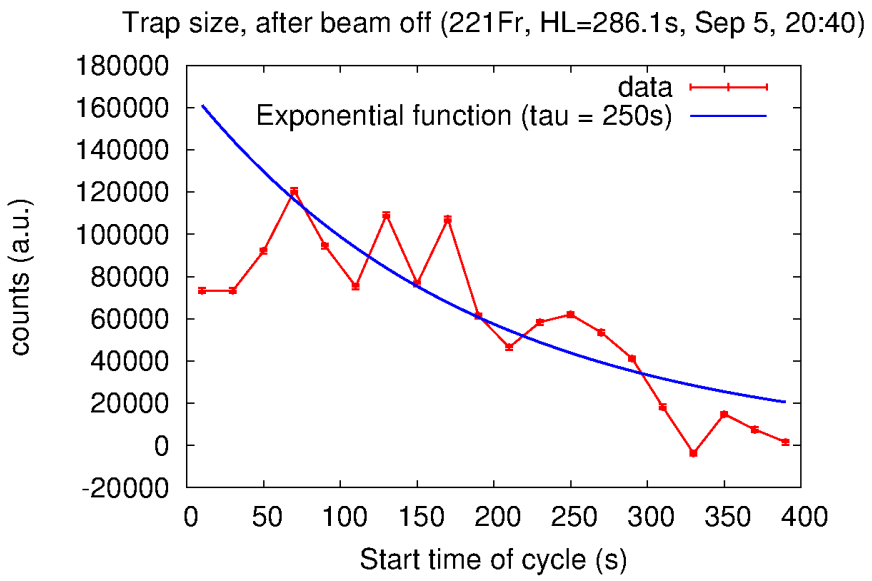

S1336 (Sep 9 + fully offline):

A=225 implantation to generate ^{221}Fr for FrPNC experiments

S1336: Idea

- ^{225}Ra: 14.9 day HL
  ^{225}Ac: 10.0 day HL
  ^{221}Fr: ~ 5 min HL,
  α recoil from ^{225}Ac:
  ~ 100 keV

- Implant ^{225}Ac in Ta
  ^{221}Fr recoils out of Ta,
  into Y

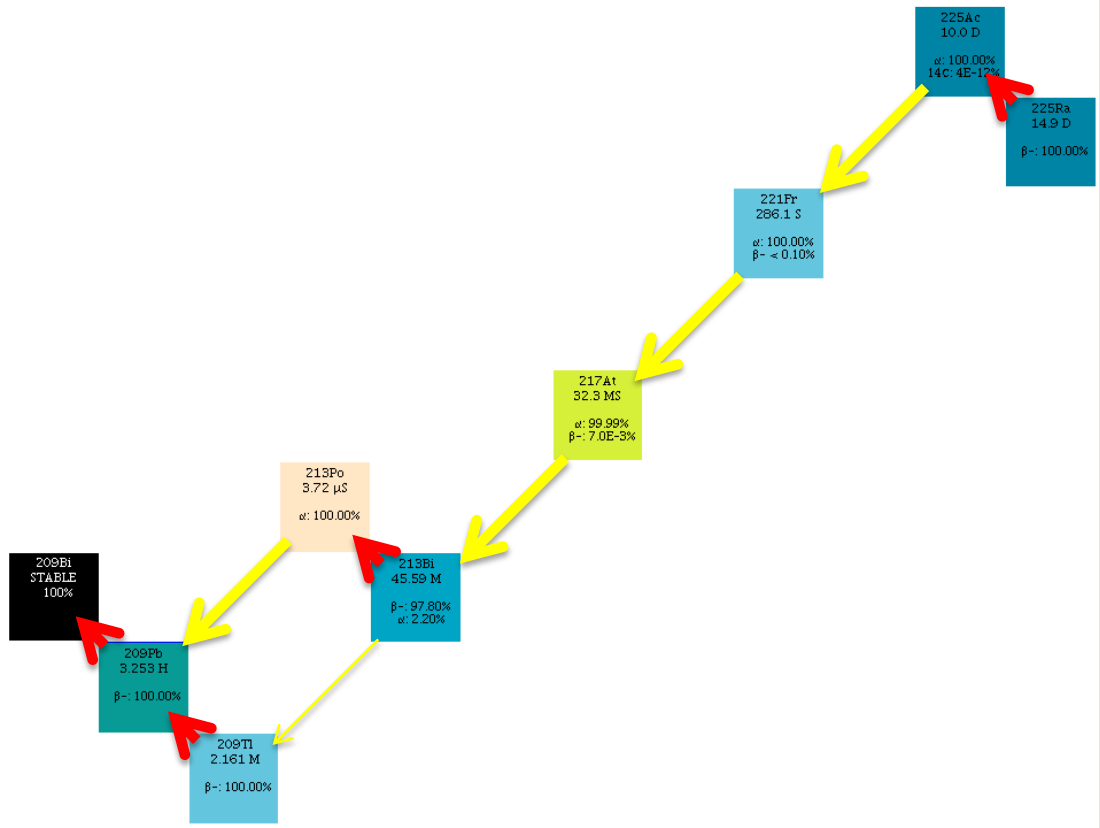

S1336: Hardware

ISAC beam

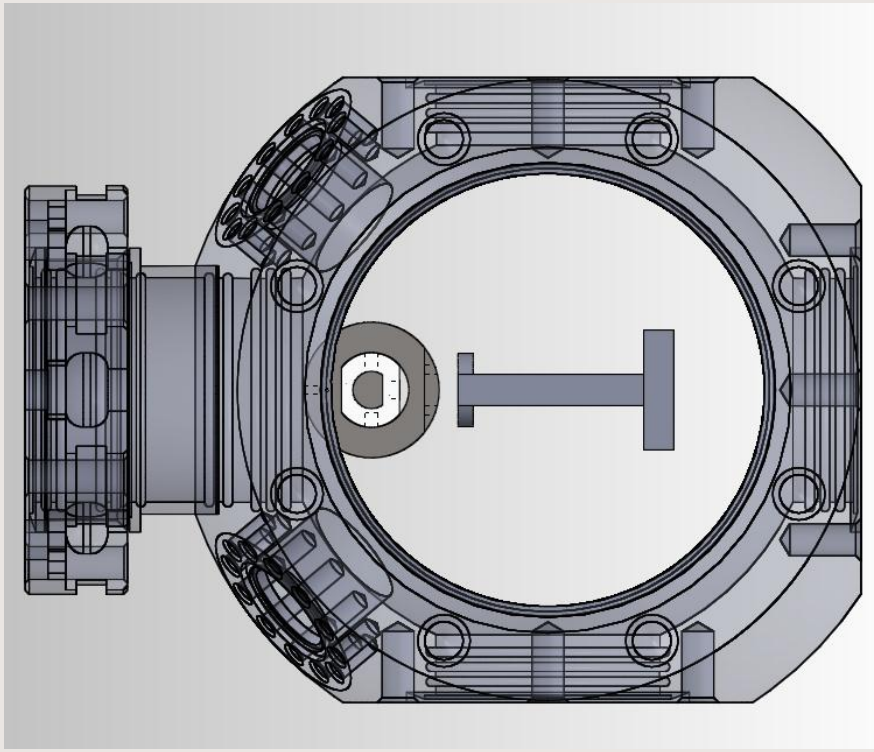

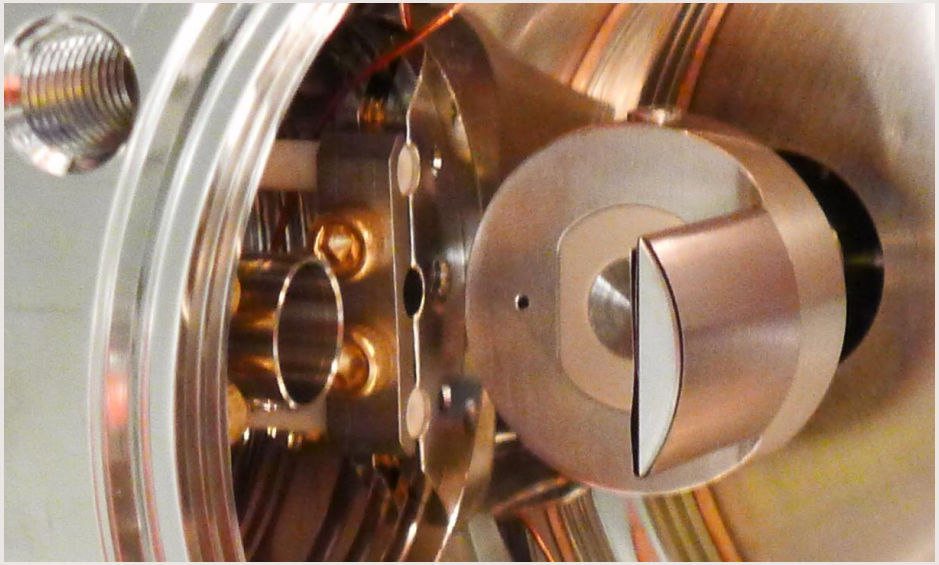

S1336: Implantation characterisation & Alignment

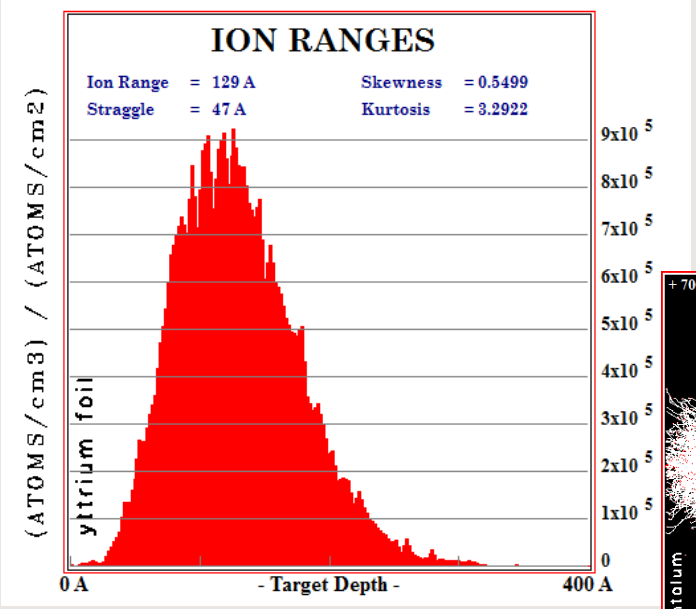

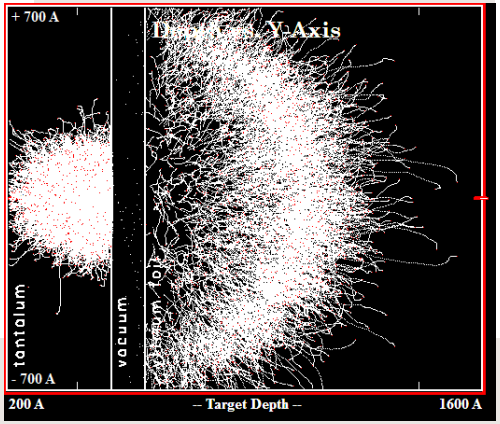

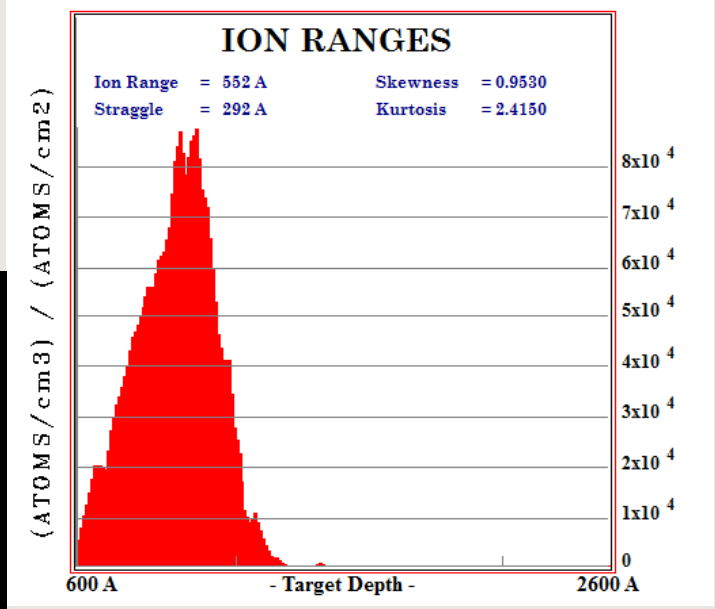

- ‘Fr beam spot’ is very different in both cases:
  - deeper implantation on average
  - wider, fuzzier spot

S1336: Implantation

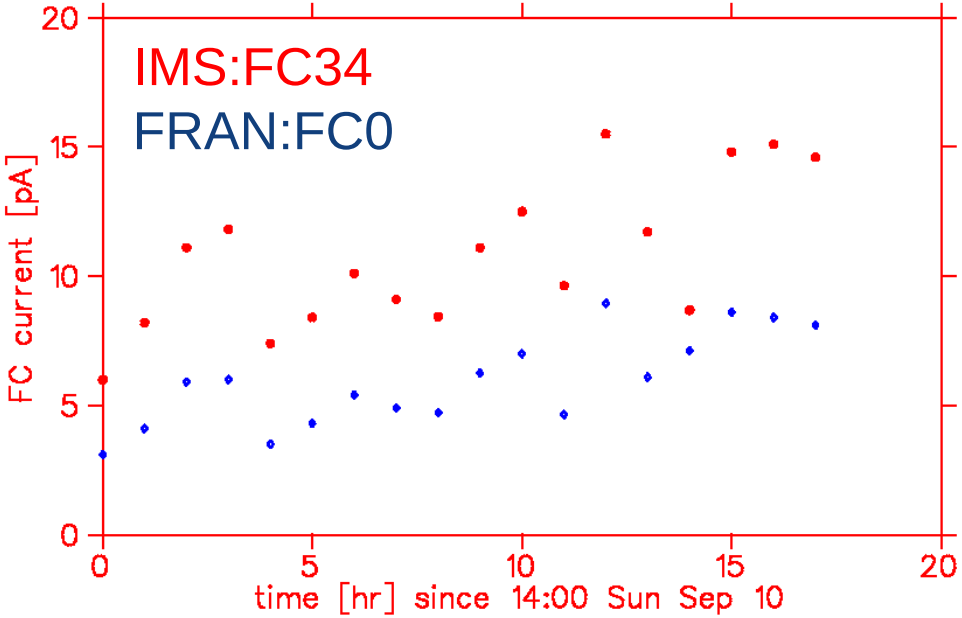

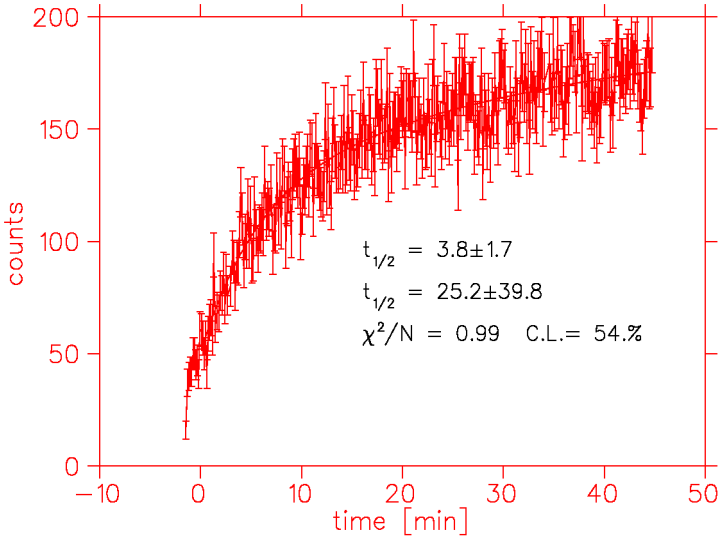

- 18 hr implantation @ 6 pA on average :
  - 2.2 10^{12} ^{225}Ac implanted
  - ^{221}Fr rate of 1.9 10^{6}/s

S1336: Alpha detector measurements

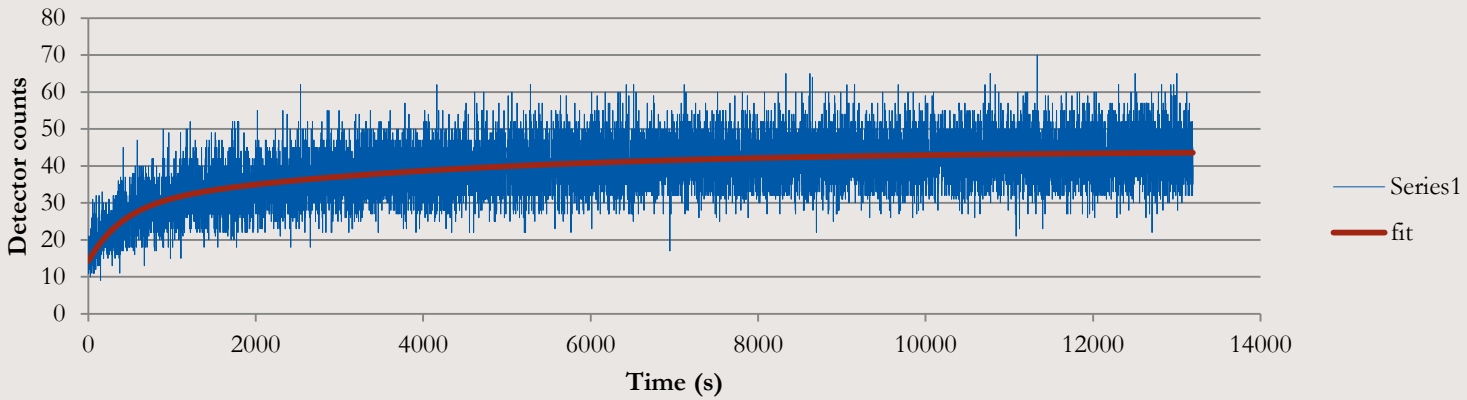

Implantation rate: 16.43 ± 0.01
Measured after 9 days, initially, 30.48
Branching ratio/efficiency is 81.66% ± 0.01%

Fr rate: ~ 30/s,

2% solid angle of alpha detector
0.045% solid angle, Ta foil to Faraday cup
3.4 10^6 ^{221}Fr/s, consistent with estimates from F. cup

S1336: Trapped atoms

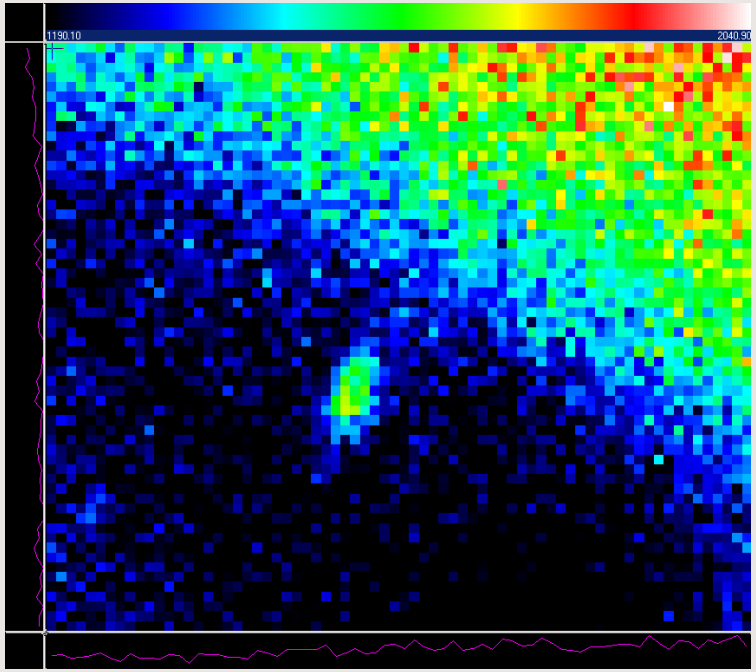

- Released ^{221}Fr:
  - 3.3 10^6 ^{221}Fr /s
  - 10 min. impl. (2x $t_{1/2}$), factor 0.75
  - 30% impl. efficiency

  3 10^8 potentially trappable

- ~2000 atoms trapped

  Efficiency a factor of 50 down, compared to the online run

Conclusion & Outlook

Conclusion

- Successfully trapped 3 isotopes of Fr,
  both from ISAC and offline ^{225}Ac source
  0.1% efficiency from ISAC beam
  Good trap lifetime (~20s)
- Online characterisation of set-up
- Various components were not optimal during run
  (e.g. fixed commercial laser)

Outlook

- Measurement in one month, S1010: Hyperfine anomaly and spatial distribution of nuclear magnetism.

  Plan: $^{207\text{-}213}$Fr, the $7s_{1/2}$ to $7p_{1/2}$ transition

Acknowledgements

The FrPNC collaboration,
work supported by TRIUMF, NRC, NSERC of Canada,
NSF and DOE of USA and CONACYT of Mexico,

Thanks to

- Controls group
- Machine shop
- Operators
- Target group
- TRILIS (Jens Lassen and Sebastian Raeder for setting up TRILIS to increase the ^{225}Ac yield)