Chapter 6

The Plan: Pursuing the Vision

6

Chapter 6

The Plan: Pursuing the Vision

6.1

Introduction to the Plan

TRIUMF is a national laboratory devoted to pursuing the answers to some of the most important scientific questions of our time. It also provides an excellent vehicle for the transfer of knowledge, the training of highly qualified personnel, and the commercialization of research for the benefit of all Canadians. The laboratory has an impressive track record in all these areas and it will be significantly expanded by full support and implementation of the 2010–2015 Five-Year Plan. This plan is motivated by a number of observations about the present TRIUMF landscape:

- **A Critical Shortage of New Rare-Isotope Beams.** Canada is on the cusp of international leadership in nuclear physics. The state-of-the-art detector systems at ISAC have been deployed to address the most critical questions in nuclear physics, and the TRIUMF facilities and expertise for the development and deployment of rare-isotope beams have created an overwhelming international demand for ISAC beam time. High-impact, cutting-edge investigations of neutron-rich nuclei important for understanding elemental abundances in the universe, supernova-explosions, neutron-density models, neutron star crusts, 3-nucleon interactions, the limits of nuclear existence and fundamental symmetries are within technical reach. In the area of molecular and materials science, β-NMR is used to study the physics of nanometre-scale and superconducting structures. All the ISAC programs critically need more rare-isotope beams: demand has outstripped supply. TRIUMF's future scientific productivity is tied to providing additional beams that will fully exploit the existing ac-

celerators and detector systems. The 2010–2015 Five-Year Plan outlines a strategy that will more than double the scientific output through increased beam availability.

- **A Nuclear Medicine Revolution.** Nuclear medicine is on the verge of a revolution. The ability to image the metabolism of disease and the construction of tumours using medical isotopes will soon be possible for many different medical conditions. This in turn will drive a major shift towards increased demand for isotopes, PET cameras, and accelerators to produce these isotopes. Through its expertise in radiochemistry, targets, cyclotron design, construction and operations, and partnerships with clinicians working in neurology and oncology, TRIUMF and Canada are in a position to lead in this area. Canada's dominance of the global medical-isotope market is at risk as other countries seek to develop their own domestic capabilities. Therefore, the development of targeted, highly specific biomarkers with radioisotope labels as envisioned in the TRIUMF Five-Year Plan can play a significant role in Canada by developing competitive positions in all aspects of this emerging new field.
- **Advanced Accelerator Partnerships.** International collaborators in Europe, Japan, India, China, the US, and elsewhere seek partnerships with TRIUMF in areas as diverse as cryogenics engineering technology, advanced accelerator development, and high-power target development. Likewise, recent successes with the transfer of TRIUMF superconducting radio-frequency (SRF) expertise to industry places Canada at the leading edge of international accelerator technology. The accelerator developments in the plan will enable Canada to expand this position in the international technology arena.
- **Information Technology.** The world's largest scientific project, the Large Hadron Collider (LHC) at CERN in Geneva, Switzerland, is scheduled to begin operations in 2008. Canada's involvement in this amazing project is through the ATLAS Canada collaboration. The LHC will address the most compelling questions in particle physics. The impact of Canadian groups on the ATLAS physics program depends critically on the success of the high-performance GRID computing analysis centre at TRIUMF whose continued operation is included in the TRIUMF Five-Year Plan.

Overview of the Plan

In the context of the laboratory's mission, TRIUMF's five-year planning process has identified targeted opportunities that are ripe for exploitation: they build on TRIUMF's successes, play to Canadian strengths, and promise high-impact results. The goals of the plan outlined in this chapter are as follows:

- **Substantially expand TRIUMF's rare-isotope beam program.** This goal will be achieved by building an electron linear accelerator (e-linac) photo-fission driver and a specialized proton beam line, coupled with a target station suitable for handling actinide targets. By increasing the number of beams available to experiments and by constructing a new driver, Canada will take a dominant position in this field. The growing Canadian demand for TRIUMF's unique capabilities in β-NMR will also be met with additional beam time. Not only will TRIUMF have the high-

est intensities of a large fraction of rare-isotope beams in the world, it will also have the ability to provide them simultaneously to several experiments.

- **Expand Canadian access to international science.** The plan will take full advantage of past Canadian financial and intellectual investments in Terascale physics experiments around the world. ATLAS science will be established, and the ATLAS Tier-1 Data Centre will expand as planned to accommodate the wealth of data collected over the 2010–2015 time period. TRIUMF will seek to keep Canada positioned for taking a leading role in upgrades to the Large Hadron Collider (LHC) and its detectors as well as the next potential project known as the International Linear Collider (ILC). Tapping its significant expertise in detector science and technology, TRIUMF will participate in and contribute to the SNOLAB laboratory and its experiments in Ontario.
- **Pursue advanced accelerator technologies.** TRIUMF will actively engage industry in the development and commercialization of superconducting radiofrequency (SRF) and other sophisticated technology. The development of this technology will also position Canada to play a significant role in proposed global high-energy physics facility developments. Collaboration with the Canadian Light Source (CLS) in Saskatoon will begin on compact X-ray sources, suitable for pharmaceutical applications, as well as prototyping for a next generation light source that would build upon the CLS facility. These activities will emphasize building up Canada's high-technology sector and positioning Canadian industry in this competitive, emerging field.
- **Lead the coming revolution in nuclear medicine.** The plan proposes a substantial strengthening of the life sciences program with new initiatives in nuclear medicine. TRIUMF will continue and expand its world-renowned partnership with the Pacific Parkinson's Research Centre (PPRC). Together with UBC, TRIUMF will lead a national network for the development of radiotracers. The TRIUMF nuclear medicine initiative also includes a new partnership with the BC Cancer Agency (BCCA). TRIUMF's role in cancer imaging and therapy closely aligns with the recent expansion by BCCA into nuclear medicine through the purchase of their own cyclotron and PET imaging. TRIUMF will also continue to work with MDS Nordion in the development and production of radioactive tracers and will initiate a major R&D initiative on radiotracer development. With a strong team, modern laboratory space, and a national network of partners, TRIUMF will play a lead role in advancing the understanding and treatment of disease with medical isotopes using safe, stable and robust facilities.
- **Exploit targeted opportunities for commercialization with partners such as Advanced Applies Physics Solutions, Inc.** TRIUMF formed Advanced Applied Physics Solutions, Inc., (AAPS) in early 2008 with support from the prestigious National Centres of Excellence for Commercialization and Research program. TRIUMF will strengthen its commercialization and knowledge-transfer success by working with Canadian private-sector to develop accelerator, nuclear-medicine, and detector technologies.

These advances are expected not only to increase the competitiveness of Canadian companies but also open whole new markets to them.

- **Train the next generation of leaders in Canadian science, technology, and innovation.** The expansion of TRIUMF's science program will naturally lead to a significant increase in the opportunities for training graduate students and technologists. TRIUMF is a magnet for international students wanting to specialize in the study and applications of unstable nuclei. Dedicated programs will be developed to further engage students and the general public in the scientific culture.

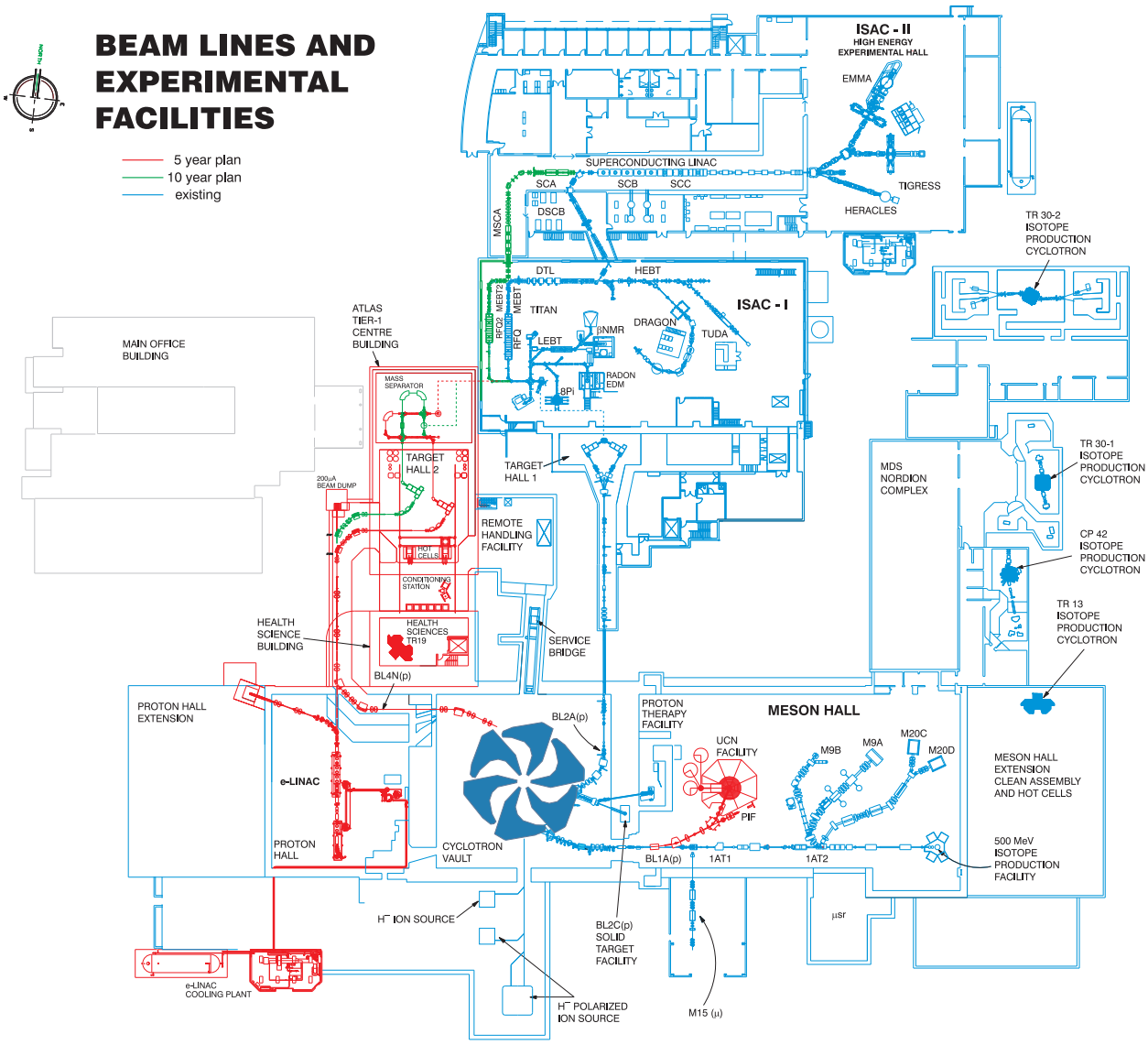

Figure 1 depicts the evolution of the TRIUMF site plan to support these initiatives.

Alignment with Canada's Strategic Goals

The program is well aligned with Canada's science and technology strategy and was specifically constructed to maximize the balanced impact on the three highlighted competitive advantages for the benefit of Canada: the knowledge advantage, the people advantage, and the entrepreneurial advantage.

- **Knowledge Advantage.** TRIUMF's focus has always been on advancing knowledge. TRIUMF's contribution to Canada's knowledge advantage is directly affected by total accelerator running time for experiments, including TRIUMF's on-site, internationally renowned, molecular and materials sciences program and nuclear physics program. Canadian accelerator expertise at TRIUMF is also critical to the country's future participation in global particle physics projects. To continue to be competitive and maintain a knowledge advantage, TRIUMF must:
  - Excel globally in research areas of national priority;
  - Provide leadership and intellectual contributions for the development of innovative techniques and technologies;
  - Engage in the continued development of GRID computing technology;
  - Increase scientific publications, citations, and involvement in international conferences; and
  - Increase investment in key areas ripe for discovery.
- **People Advantage.** One of the strong side benefits of scientific research is the creation of highly qualified personnel. Cutting-edge technological development in accelerator design, detectors used in subatomic physics, medical imaging, molecular and materials sciences, advanced computing, data mining and analysis techniques, all generate trained people, who are then sought after in Canadian and international science and industry. Canada's national base of skilled workers in these fields depends on the viability of the TRIUMF program and its ability to:
  - Attract international scientists and students to work at TRIUMF;
  - Enhance Asia-Pacific scientific personnel exchange;
  - Create undergraduate and graduate student research opportunities;
  - Establish initiatives to attract and retain talent from traditionally underrepresented communities;
  - Increase the engagement of Canadian universities in the TRIUMF program; and
  - Participate in international student research exchange.
- **Entrepreneurial Advantage.** TRIUMF consistently works with Canadian industry to expand national capabilities in emerging technological fields. This success has been recognized in the past through two NSERC Synergy awards, one in 2004 with MDS Nordion, and one in 2007 with

D-Pace, and is evident in the 2010–2015 Five-Year Plan. TRIUMF will increase its entrepreneurial advantage with more beam time for medical-isotope production at the MDS Nordion Solid-Target Facility and increased availability of TRIUMF personnel to provide guidance to companies like D-Pace, MDS Nordion, Thales, and Advanced Applied Physics Solutions, Inc. (AAPS). In addition, the development and deployment of GRID computing and data-mining by the ATLAS Tier-1 Data Centre personnel will position Canada as a leader in a critical and emerging field of information technology. Similarly, benefits to companies like PAVAC Industries, Inc. from the e-linac project will position Canada to be among the leaders in this emerging high-technology area. TRIUMF is also expanding its connections with national and international research partners such as PPRC, BCCA, Japan's RIKEN, the US's ORNL, ANL, and MSU, Germany's GSI, France's GANIL, CERN'S ISOLDE, and Canadian universities. All of these connections will further expand the markets for Canadian industry. To ensure this expansion, TRIUMF must:

- Triple the economic impact from technology transfer and commercialization via Advanced Applied Physics Solutions, Inc.;
- Forge new industrial partnerships related to TRIUMF's world-recognized leadership in medical-cyclotron design;
- Establish a major new partnership with India in accelerator science;
- Connect radiotracer know-how with drug-development activities at the major pharmaceutical companies; and
- Establish a new partnership with MDS Nordion in radiotracer development.

Conclusion

TRIUMF's five-year vision is transformational. It fully exploits TRIUMF's core competencies in (a) accelerator technology, (b) detector technology, (c) scientific computing and large-scale data management, and (d) isotope production, thus expanding and strengthening both scientific and entrepreneurial advantages. The 2010–2015 Plan calls for the financial means to realize TRIUMF's full scientific and technological potential and optimize its role in support of the scientific communities it serves. In doing so, the plan maximizes the educational and societal benefits, and provides an excellent return on investment for Canadians.

The layout of this section is as follows: The scientific program proposed for the 2010–2015 period is discussed in Section 6.2 and the role of accelerator-technology development and stewardship in the plan is discussed in Section 6.3. Several of the CFI proposals depending on TRIUMF that partner universities are putting forward are described in Section 6.4. Section 6.5 discusses the broader benefits of the plan to Canadian society. Recognizing that tradeoffs are inherent in policy making, several implementation strategies are presented along with analysis of the relative impacts in Section 6.6.

6.2

The Research Program

6.2.1

Rare-Isotope Beams

6.2.1.1

Science

6.2.1.1.1

Overview of Physics with Rare Isotopes

Nuclear physics, the study of nucleons (the substructure of protons and neutrons), nuclei (finite nuclear systems), and nuclear matter ("infinite" nuclear systems, *e.g.*, neutron stars), is entering a very exciting time because of the recent convergence of a number of separate paths of research.

On the experimental side, two major milestones have advanced the research: large arrays of detectors with extraordinary data-collecting power, and accelerator facilities which provide experimental access to intense mass-selected (isotope-selected) beams with lifetimes down to the microsecond scale. The combination of these two capabilities marks a unique, major advance in nuclear physics that has not been seen in a number of decades.

On the theoretical side, major developments are energizing the field. As discussed in Section 4.2.1.1 on the TRIUMF Theory Group activities, the development of many-body techniques like the coupled-cluster model coupled with a better understanding of the nucleon-nucleon interaction is opening up the *ab initio* calculation of the properties of finite nuclei for the first time. Major progress is also being made in understanding the types of models needed to describe collective motions in nuclei (shapes, phases, and their dynamics and coexistence).

Observational astronomy is also entering a golden age. The ability of current satellite instruments to observe different stellar phenomena over the range of

photon energies corresponding to γ-rays, X-rays, ultraviolet, visible, infrared and microwaves is truly astounding. With these instruments, discoveries of new phenomena and new perspectives on known phenomena are occurring at an impressive rate. The interpretation of these observations is placing new demands on our knowledge in key physics areas. One of the most important areas is nuclear physics, since the source of energy that drives many stellar phenomena derives from nuclear reactions. Also, nuclear reactions are directly responsible for the chemical evolution of material from basic primordial hydrogen and helium to elements all the way to uranium.

As main sequence stars evolve, energy is produced primarily through nuclear reactions involving stable nuclei. In contrast, for cataclysmic events such as nova, supernova and X-ray bursters where prodigious outbursts of energy can occur on the time scale of seconds, the relevant nuclear reactions can involve very exotic unstable nuclei. Nuclear astrophysics concerns the study of the relevant nuclear reactions that drive these stellar engines.

The TRIUMF-ISAC facility has invested heavily in experimental capabilities of all of the frontiers involved and has been a major contributor to proving that we are entering a period of unprecedented research potential. Specifically, it is at TRIUMF-ISAC that the most intense mass-separated beams ever have been used for experimental studies. Some of these studies have used the 8π and TIGRESS arrays of detectors that are among the most advanced, in their respective deployment, ever applied to nuclear structure studies. In addition, at TRIUMF-ISAC highly competitive experimental capabilities for trapping and characterizing rare isotopic species, such as TRINAT and TITAN and for investigating reactions produced by secondary beams of these species, such as DRAGON, TUDA, and TACTIC have been built.

In this Five-Year Plan, the new directions before TRIUMF are outlined that will build on existing experimental capabilities: a proposed new accelerator, a proposed actinide target, and a second proton beam line.

When defining the subject of nuclear physics, it is important to emphasize that it does not stand alone as a sub-area of physics. Nuclei are parts of atoms, and as discussed above, the origin of the atoms that constitute all the different chemical elements in the universe is a nuclear physics issue. We live in a world controlled by conservation laws and symmetries, and the proof of and refinement of these laws has often fallen to the nuclear physicist, working with the nucleus as a "laboratory" for the study of fundamental processes. In particular, the intense beams of high-Z isotopes that will be produced at ISAC using an actinide target will allow for an order of magnitude improvement on the current limits of the CP-violating atomic Electric Dipole Moment (EDM) and further constrain both atomic and nuclear parity non-conservation effects.

Finally, one should also be mindful that nuclear science is part of everyone's daily lives whether they know it or not, from smoke alarms to medical diagnostics and therapies to nuclear power. Quite apart from the above specifics, nucleons, nuclei, and nuclear matter are fundamental levels of organization of matter and have natural places as cornerstones of exploration in the world that we find around us.

6.2.1.1.2

What is the Structure of Nuclei and Nuclear Matter?

Introduction

"What is the structure of nuclear matter?" is a central question that touches upon many different areas. The central goal of nuclear physics is to explain the properties of nucleons, nuclei, and nuclear matter. Ultimately, it is desirable to attain this goal, starting from an understanding of the nucleon-nucleon interaction based on the fundamental theory of quantum chromodynamics. Indeed, considerable progress is being made in this direction with the development of *ab initio* methods, a more sophisticated understanding of the nucleon-nucleon interaction, and the application of advanced many-body techniques to nuclear physics. But connecting the fundamental theory to the nucleon-nucleon interaction poses a severe challenge, and the complexity of the strongly interacting many-body system requires that the study of detailed properties of nuclei rely on both *ab initio* calculations and more phenomenological models for the foreseeable future.

These models, both *ab initio* and phenomenological, have largely been tested on the properties of nuclei located at or near the line of stability because

that is where the most data are available. Extrapolations into areas where no data exist are highly uncertain and are very often proven wrong by experiments. We cannot at this point give a satisfactory answer to the question posed above. To make progress, we need to break the question down into smaller, more manageable questions. While there are many questions that can be asked in relation to "What is the structure of nuclear matter?" TRIUMF and its user community have concentrated on the following:

1. What are the limits of nuclear existence?
2. How do the properties of nuclei evolve as a function of the neutron-to-proton asymmetry?
3. How do the properties of nuclei evolve as a function of proton and neutron number?
4. What are the mechanisms responsible for the organization of individual nucleons into the collective motions that are observed?

What is the role of nuclei in shaping the evolution of the universe?" is a question intimately related to the structure of nuclei and nuclear matter. The synthesis of hydrogen, helium, and Li in the Big Bang is probably understood. Elements as heavy as iron are predominately produced as a result of stellar burning, while elements above iron are probably produced in supernovae explosions and other astrophysical phenomena. It is a goal of nuclear astrophysics to understand fully the origin of the elements in the universe and how nuclei impact directly the nature of the astrophysical objects and their dynamics. We cannot yet give a satisfactory answer to the question posed above. As before, we break this one central question down into manageable pieces that TRIUMF and its user community is concentrating on:

1. How does stellar evolution proceed?
2. How and where are nuclei heavier than iron created?

Nuclear structure and nuclear astrophysics, as broad fields of investigation, attempt to answer these questions. Nuclear structure and nuclear astrophysics are so intertwined that any separation between them is quite arbitrary and artificial. To explain stellar evolution, we need to understand key phenomena including the mechanism of supernovae explosions and the nature of neutron stars, as well as precisely measure basic nuclear properties such as half-lives, masses, reaction rates and nuclear equations of state. Given the complexity of many of the reaction networks that are thought to be present in stellar burning and explosive nucleosynthesis, and the locations of the various process paths, which often occur very far from stability, it cannot be expected that all necessary data will be measured. Therefore, nuclear models must, at least partly, be relied upon. The development of accurate and predictive nuclear models, however, has proven to be a challenge for decades. The very nature of the strongly interacting many-body system does not lend itself to easy computation. Nuclear structure investigates the properties of nuclei in an attempt to understand their natures and to guide the development of nuclear models so that they are able to accurately predict properties beyond the reach of experiment.

This section of the plan addresses the fundamental questions relevant to nuclear structure while the nuclear astrophysics questions are addressed in Sections 6.2.1.1.3.1 and 6.2.1.1.3.2.

What are the Limits of Nuclear Existence?

Nuclei are finite many-body quantum systems which exhibit a rich variety of single-particle, few-body, and many-body phenomena. Precise control over the particle (nucleon) number permits very detailed systematic studies to be made. Such studies reveal behaviour that would be impossible to see in isolated species and can only be discerned by systematic study as a function of changing particle number. Such studies also reveal "emergent" phenomena that would be unimagined if only a microscopic approach were available [P.W. Anderson, Science 177, 393 (1972)]. For example, current ab initio calculations starting with the nucleon-nucleon interaction systematically depend on data for light nuclei to establish three-and many-body forces in nuclei, without which the calculations would be useless.

One of the critical questions in nuclear physics concerns the limits of existence, *i.e.*, at what point do nuclei become unbound? Not only is this question of profound importance in our understanding of the nature of the nucleonic system, but it also has a deep impact on nuclear astrophysics, especially in connection with the nucleosynthesis of heavy nuclei through the r- or rapid-neutron-capture process. On the proton-rich side of the valley of stability, the position of the proton drip line has been delineated for many of the elements because this region can be accessed by stable beam/target experiments. On the neutron-rich side, however, the location of the neutron drip line is largely unknown except for the lightest elements, up to oxygen. Figure 1 is a chart of the nuclides indicating the known stable and unstable nuclei, as well as the

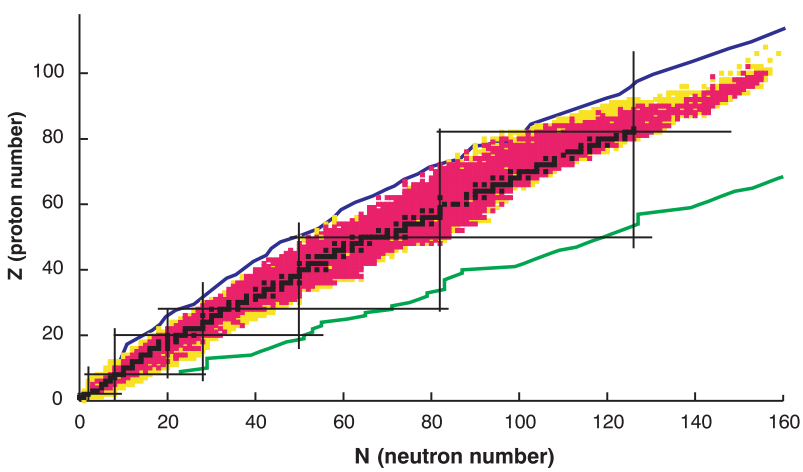

Figure 1: The chart of the nuclides with proton and neutron drip lines as predicted by the FDRM model (AME2003). Stable nuclei are marked by black squares, nuclei for which excited states are known are pink (ENSDF), and nuclei with measured masses (AME2003) are yellow. Thousands of nuclei have yet to be explored.

region predicted where bound nuclei exist but as yet have not been observed. The uncertainty in predicting the limits of nuclear existence is due to an incomplete knowledge of nuclear properties progressing away from the line of stability. Already, between mass 25 and 35, two major breakdowns in "well-established" descriptions of nuclear structure occur. Surprises also appear to be looming near N ~ 28 [B. Bastin *et al.*, Phys. Rev. Lett. 99, 022503 (2007); T. Baumann *et al.*, Nature 449, 1022 (2007)].

All nuclear models use detailed properties of known nuclei to determine the proper form of the effective interactions and their parameters. However, it is mostly at or near stability where these have been determined. As an example, Figure 2 displays the uncertainty in predicting the location of the neutron drip line, *i.e.*, where $B_n = 0$, for the tin isotopes. While all mass models reproduce the known experimental data reasonably well, extrapolating to the drip lines results in an uncertainty of nearly ten mass units. One of the main reasons for this uncertainty is the interplay between the bulk, smoothly varying properties of nuclei and the structure of nuclear shells. The exact location of the proton and neutron shells, and whether these shells are open or closed, can result in substantial change in the binding energy. Accurate and precise mass measurements on nuclei farther from stability are needed to fix model interactions and parameters.

How Do the Properties of Nuclei Evolve as a Function of the Neutron-to-Proton Asymmetry?

The advent of rare-isotope beams has made it possible to explore how the properties of nuclei evolve along a chain of isotopes extending to both proton-

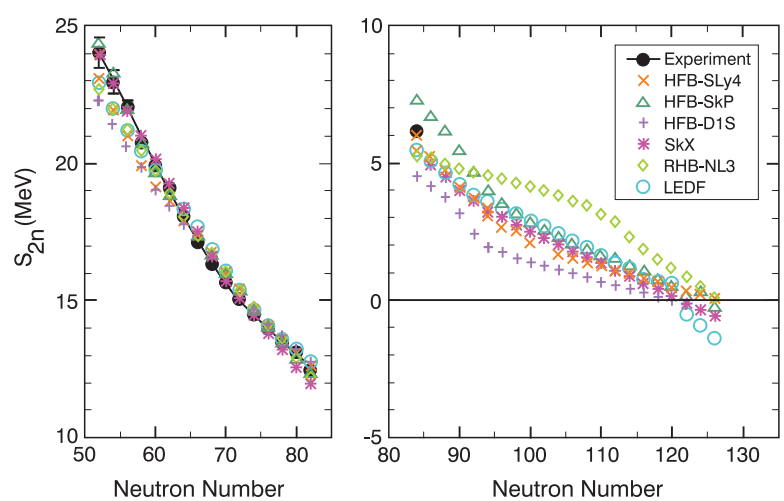

Figure 2: Values of the two-neutron separation energy, S_{2n}, versus neutron number for the Sn isotopes. Where experimental data exist, up to $N = 84$, the mass models reproduce the data reasonably well. However, uncertainties in the interactions and their parameters result in an uncertainty of nearly 10 mass units in the limit of existence.

and neutron-rich nuclei. This capability has led to the discovery of new and unexpected phenomena close to the edge of stability where nuclei with extremely small separation energy of one or two nucleons can form so-called "halo" systems. In these nuclei, the weakly bound valence nucleons have a significantly large probability of being located far outside the rest of the nucleus called the "core." One of the first examples of this exotic structure was ^{11}Li, where two neutrons bound to a ^{9}Li core by only 380 keV give rise to a giant nucleus comparable in size to a heavy nucleus like ^{208}Pb [I. Tanihata *et al.*, Phys. Rev. Lett. 55, 2676 (1965)]. In addition to weak binding, the orbitals occupied by the halo neutrons in ^{11}Li also contribute to its large size. In particular, the low angular momentum $2s_{1/2}$ orbital intrudes into the *p*-shell. Such a reordering of orbitals also leads to a breakdown of the $N = 8$ shell gap for ^{11}Li.

The removal of one neutron from ^{11}Li results in the unbound nucleus ^{10}Li, indicating that it is the extra pairing energy of the valence neutrons that is responsible for the additional binding energy, which leads to the existence of ^{11}Li. It has been proposed that the extra pairing strength is mediated by the exchange of low-frequency surface vibrational quanta, and confirmation of this mechanism would lead to the understanding of the ^{11}Li halo as an isolated neutron Cooper pair [F. Barranco *et al.*, Phys. Rev. Lett. 83, 2147 (1999)]. Another outstanding question is whether and how the excess neutrons in halo nuclei influence the proton distribution. For the halo nucleus ^{11}Li, this question has already been addressed at ISAC by determining the isotope shifts through precision laser spectroscopy in order to extract the charge radii for $^{6-11}$Li [R. Sanchez *et al.*, Phys. Rev. Lett. 96, 033002 (2006)].

Heavier very neutron-rich nuclei, rather than forming halos may instead form neutron skins. The extension of the neutron skin is less dramatic than the halo but its presence can be expected to have important influences on fusion cross sections because of the localization of neutron matter at the surface of the nucleus. A complete characterization of the neutron skin will require the knowledge of the single-particle neutron states occupied in these nuclei in addition to their decay properties and reaction rates. Further, the establishment of the thickness of the skin determined by examining the difference between the nuclear matter radius and the charge radius, is a crucial quantity for testing models of nuclear matter.

The decoupling of the protons and neutrons in halo/neutron skin nuclei can lead to an oscillation of the halo/skin neutrons with respect to the core [K. Ikeda, Nucl. Phys. A538, 355c (1992)]. Such an excitation process would result in dipole resonances that are located much lower in excitation energy than the standard giant dipole resonance. In halo/neutron skin nuclei, these modes of excitation are called soft dipole and pygmy resonances, respectively. The existence of such dipole modes just above the neutron threshold might also have an important effect on fusion cross sections and thereby affect *r*-process nucleosynthesis. So far, the presence of low-lying dipole strength in ^{11}Li has been observed, but the existence of a full-fledged resonance state is yet to be clearly confirmed.

Finally, the halo/skin neutrons could also experience different nucleon-nucleon correlations and pairing effects since on average they reside well separated from the protons. The proximity of the halo neutrons to the continuum could also affect these correlations. The two-neutron transfer reaction is a highly sensitive way of probing the correlations of halo neutrons because the shape and magnitude of the angular distribution reveals information on the

neutron orbitals and the spatial and momentum correlations. To this end, a pioneering measurement has already taken place at ISAC-II, where the two-neutron transfer reaction H(^{11}Li,^{9}Li)*p* was investigated.

Future Program for Investigating Halo Nuclei and Neutron Skins at ISAC-I

As discussed in Section 4-2-1-1-2-1, research at the ISAC-I facility at TRIUMF has made a significant contribution to the understanding of halo nuclei through several pioneering studies on ^{11}Li. To discuss the future scope of the program at ISAC-I and other complementary facilities, international experts on the field gathered at the "Halo 08 Workshop" at TRIUMF on March 27–28, 2008. Some future directions and physics goals for the coming years at ISAC-I emerged from the Workshop and are discussed below. These studies will use a variety of experimental techniques including: inelastic scattering, one- and two-nucleon transfer reactions, Coulomb excitation, mass measurements and spectroscopy using ion and atom traps, β-decay studies, and the use of polarized beams for laser spectroscopy studies.

A program of one- and two-nucleon transfer reactions has already been initiated at TRIUMF to determine nuclear orbital occupancies and neutron-neutron correlations in light halo nuclei. In addition to the ^{11}Li(*p,t*) experiment mentioned above, TIGRESS (TRIUMF-ISAC Gamma-Ray Escape Suppressed Spectrometer) studies the ^{11}Be(*d,p*γ)^{12}Be reaction to provide information on the distribution of intruder *s*-wave strength in the levels in ^{12}Be. In the coming years, when beams of neutron-rich carbon and oxygen isotopes are available, this program will be extended to include experiments such as ^{18}C(*d,p*γ)^{19}C. For Borromean nuclei, the resonances in the unbound subsystem will be probed through transfer reactions such as ^{12}Be(*d,p*)^{13}Be. The characterization of neutrons forming the nuclear skin can be accomplished using single nucleon transfer reactions such as (*p,d*), (*d,t*), or (*d,p*) using the proposed IRIS facility (see Section 6.4.4) on neutron-rich nuclei such as ^{30}Na, ^{54}Ca, $^{70-78}$Ni, and ^{134}Sn. Proton-skin can be studied using (*d*,^{3}He) reactions on proton-rich Cl isotopes, which could be produced by protons on actinide targets. Two-neutron transfer reactions such as (*p,t*) will be used to probe the neutron-neutron correlation in neutron-skin nuclei such as ^{30}Na and ^{134}Sn. Finally, soft dipole modes in ^{11}Li will be studied through inelastic proton scattering. The access to heavier neutron-rich nuclei will open future possibilities to search for pygmy resonances in ^{54}Ca and ^{132,134}Sn by using inelastic scattering with light targets such as hydrogen and deuterium.

The 8π spectrometer, and later GRIFFIN (Gamma-Ray Infrastructure For Fundamental Investigations of Nuclei), will be used to study the β-decay of light halo nuclei such as ^{14}Be, ^{19}C, and ^{23}O. DESCANT (DEuterated SCintillator Array for Neutron Tagging) will further enhance the study of β-delayed neutron emitters. In the region of neutron skins, there exists a tremendous opportunity as much is still unknown. High-precision mass measurements using TITAN (TRIUMF Ion Trap for Atomic and Nuclear Science) will continue to be used to determine the binding energies of halo and neutron skin nuclei such as ^{14}Be , ^{19}C , ^{17}Ne, and ^{26,27}F. These measurements are of critical importance as input to three-body models and are also essential to limit the uncertainties in charge-radius measurements. Polarized rare-isotope beams, together with the β-NMR and β-NQR facilities can be used to measure the

ground state magnetic dipole and electric quadrupole moments of halo and skin nuclei. A proposal to measure the moments of ^{11}Li has already been approved. Future measurements will focus on neutron-rich halo nuclei from Be to F. Nuclear skin studies will be facilitated by measurements on neutron-rich Na, Mg, and Ca isotopes.

Finally, precise laser spectroscopy measurements will be extended to measure the charge radii of ^{11,12,14}Be. For heavier nuclei such as Ni and Sn, where long chains of isotopes are available for study, systematics of the change in the mean-squared charge radii as well as the radial distribution of valence neutrons can be deduced. Knowledge of the nuclear matter radius, deduced from the analysis of nuclear reactions, will provide a consistency check and give confidence in the extracted value of the neutron-skin thickness. The proton distribution in very heavy nuclei beyond the regime of stable nuclei, such as francium, will be explored from ^{206}Fr extending as far out in the neutron-deficient direction as possible. High-precision laser spectroscopy on the light Fr isotopes will also allow for an investigation of the wave function of the valence neutron via the Bohr-Weisskopf effect.

How Do the Properties of Nuclei Evolve as a Function of Proton and Neutron Number?

This question underlies all other questions in nuclear structure and has a major impact on nuclear astrophysics. To a very large extent, the question of the evolution of nuclear properties with proton and neutron number can be recast as the question "How does the nuclear shell structure evolve with proton and neutron number?" The limits of bound nuclei are intimately connected with the properties of nuclear shells: their locations and nature as a function of proton and neutron number. The location of shells also determines how the organization of nucleons into collective behaviour manifests itself, whether at low-excitation energy the nucleus behaves like a few particles orbiting a closed inner core, if it acts similar to a quantum vibrational system, or if it acts more like a quantum rotor.

Serious breakdown of well-established models of nuclear ground-state properties is being encountered in the first studies of very neutron-rich light nuclei. The expected shell closure at $N = 20$ was shown to have been "replaced" by a strongly deformed structure through the observation of a very low-lying first excited state in ^{32}Mg. For this reason and the fact that a new shell closure arises at $N = 16$, the chain of oxygen isotopes terminates at ^{24}O with the conventionally expected doubly magic ^{28}O being unbound. This has been known for some time, but a full answer to "Why?" is only now, slowly, beginning to emerge in this very-difficult-to-study neutron-rich region. Studies of excited-state properties play a key role in understanding ground-state properties.

Two factors appear to be at work in these breakdowns. First, monopole shifts in shell model states are causing significant "migration" of shell gaps. A detailed study in the neutron rich Cu isotopes provides an excellent perspective of what is possible, through the interplay of experiment and theory, in exploring this issue [I. Stefanescu *et al.*, Phys. Rev. Lett. 98, 122701 (2007) and I.

Stefanescu *et al.*, Phys. Rev. Lett. 100, 112502 (2008)]. Possibly a tensor force plays a very important role in producing monopole shifts, as has been invoked to explain why the $N = 20$ shell closure disappears in the neutron-rich oxygen isotopes [Y. Utsuno *et al.*, Phys. Rev. C64, 011301 (2001)]. Secondly, shell model intruder states can become ground states in nuclei at and near singly closed shells when the other nucleon number is far from a closed shell. This is probably happening in ^{32}Mg and its neighbours, but the picture is very confused due to very little data suitable for answering these questions. If shell gaps weaken or correlations from residual interactions become strong, structure as we know it can undergo major change.

Unusual changes in structure can be heralded by unexpected ground-state properties such as mass measurements. This is epitomized by the discontinuity in S_{2n} values for the neutron-rich Na isotopes which signalled the onset of deformation in the "Island of Inversion" years before the first γ-ray was reported from decay studies in the region [C. Thibault *et al.*, Phys. Rev. C12, 644 (1975)]. TITAN, the on-line Penning trap at TRIUMF-ISAC, will provide the first information on nuclei produced at ISAC with as low as ~100 ions/second and $\tau_{1/2}$ ~ 50 ms. Additionally, this highly precise instrument, the only one of its kind using highly charged ions, enables greater precision than any other and can be used to achieve extraordinary sensitivity, ultimately employed to

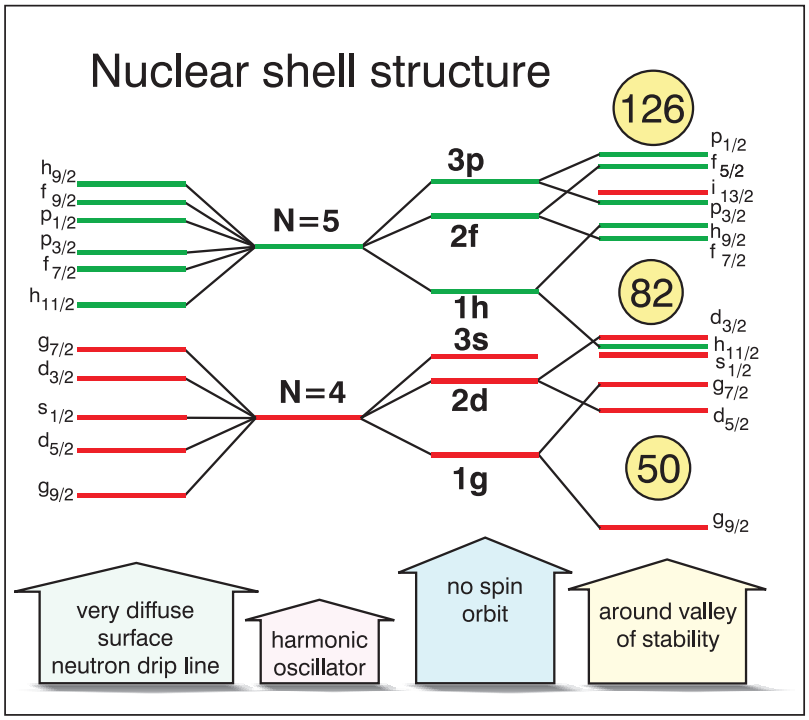

Figure 3: Shell structure as observed around the valley of stability (right), and that predicted for very neutron-rich nuclei. To probe shell structure, experiments such as transfer reactions, or those designed to extract transition matrix elements like Coulomb excitation or lifetime measurements, must be performed. For definitive results, systematic studies following the evolution of shells from stability are needed.

contribute to the probing of fundamental symmetries with precise ($\delta m/m<10^{-9}$) mass measurements for Fermi β-decay.

A number of theoretical calculations now predict that the familiar shell gaps that give rise to the "magic" numbers, or major shell closures, may change drastically in neutron-rich nuclei across the whole nuclear chart. Figure 3 shows one possible scenario, based on theoretical calculations, for how shell structure may be modified in heavy, very neutron-rich nuclei. The locations of the nuclear shells as a function of both proton and neutron number are critical data for testing and refining nuclear models that have had their parameters tuned from knowledge of nuclei at or near the line of stability. The locations of shells also have a profound impact on nucleosynthesis models, specifically on the location of the *r*-process path, and also on the nature of the excited levels (and the density of them) through which reactions, like (n,γ) and (p,γ), proceed.

New theoretical calculations incorporating interactions thought responsible for the modification in shell structure have become available and provide motivation for experimental tests. One such example is in the heavy Ca isotopes where at slightly higher masses the increasing energy of the $f_{5/2}$ orbital with neutron excess is thought to generate a new magic number at $N = 34$, making ^{54}Ca a doubly magic nucleus along with its stable partners ^{40}Ca and ^{48}Ca. As of yet, the data do not exist to test this prediction.

To map shell structure, extensive systematic studies of nuclear properties must be performed, starting with nuclei near the stability line, where the locations of the shells are, in general, known, and progressing outwards. The following key experiments must be undertaken:

1. Mass measurements, where evidence for major shell closures are found in deviations of the masses from smooth trends;
2. β-decay, which often yields the first crucial information on the locations, angular momenta, and parities of excited states and isomers, and tests key selection rules related to the underlying nature of the levels;
3. Coulomb excitation, measuring key matrix elements that depend on the state wave functions, specifically the collective properties;
4. Single-nucleon transfer reactions that probe the microscopic, single-particle, nature-of-state wave functions; and
5. Measurement of charge radii via precision laser spectroscopy.

Studies of the Evolution of Shell Structure at ISAC

A major experimental hurdle to studying very neutron-rich nuclei is the basic technical problem that for isotopes far from stability, yields go down and isobaric contamination goes up. In many cases, this problem has proven to be the limiting factor for the isotope-separator-on-line (ISOL) approach to studying very neutron-rich nuclei produced by fission and spallation of actinide targets with high-energy protons. The proposal herein to build a photo-fission driver offers a major advantage over protons through a significant reduction (and even in many cases elimination) of short-lived neutron-deficient isobars, as is shown in Section 6-2-1-2-3, Figure 8. Note, however, that high-current proton beams on an actinide target provides intense beams of neutron-rich isotopes in mass regions that are not in the "regular" fission fragment islands (see Section 6-2-1-2-3, Figure 7); and thus complement the photo-fission-driver capability.

All of the available spectroscopic tools will be used to access shell structure evolution with a number of experiments using TITAN, the 8π, GRIFFIN, and TIGRESS spectrometers, EMMA and DESCANT.

^{32}Mg Region and the "Island of Inversion"

Experiments on nuclei near ^{32}Mg, aimed at the study of the mechanism involved in the disappearance of the $N = 20$ shell closure and formation of the $N = 16$ shell closure have already begun using the 8π spectrometer to study the β-decay of ^{32}Na and TIGRESS to study the Coulomb excitation of ^{29}Na. When intense beams of the most neutron-rich nuclei become available from the ISAC actinide target, these studies will be extended. Experiments using β-decay observed with the 8π spectrometer, and later GRIFFIN, will be performed on the most neutron-rich nuclei near and beyond ^{32}Mg. The mechanism responsible for the modification of the $N = 20$ shell closure cannot be fully answered unless access is gained to nuclei beyond ^{32}Mg. With the upgrade of the γ-ray detection ability provided by GRIFFIN, spectroscopy could be performed with beam intensities as low as 0.01 ion/s. This spectroscopy will enable experiments on the crucial nuclei farther from stability, providing a more complete picture of shell structure evolution.

TIGRESS experiments will focus on measuring precisely *E2* transition matrix elements using Coulomb excitation for the $N = 16$-20 isotopes $^{26-30}$Ne and $^{28-31}$Na. Single-nucleon transfer reactions such as ^{24,25}Na(d,$p\gamma$) will also be used to probe the energies of the intruder orbital responsible for the island of inversion. These experiments will use TIGRESS for γ-ray detection and the segmented Si array SHARC for coincident proton detection.

Unique opportunities exist for the studies of nuclei at moderate to high spins in this region with fusion-evaporation reactions using the DESCANT+TIGRESS combination. The use of fusion-evaporation reactions would allow for the establishment of yrast and near-yrast states and would provide a test of the rotational properties of the levels. The $N = 16$ nucleus ^{30}Si can be reached with the reaction ^{9}Be(^{24}Ne,3n)^{30}Si; without light charged particles in the final state, events must be detected in DESCANT to indicate that a reaction has taken place. Indeed, ^{31}Si would be within grasp, and it may be possible to reach the $N = 18$ nucleus ^{32}Si with the reaction ^{13}C(^{22}O,3n)^{32}Si. Using a ^{14}C target would provide access to the $N = 20$ nucleus ^{34}Si. While experiments examining the latter nuclei would be low count-rate experiments, the use of tagging via the neutrons should eliminate very effectively the backgrounds from the decay of the beam particles scattered in the target chamber. In a similar vein, ^{32}Mg itself may be accessed via the ^{13}C(^{22}N,$p2n$)^{32}Mg reaction. In all cases, the identification of γ-rays to the channel can be accomplished by measuring the neutron multiplicity on an event-by-event basis.

The hypothesis of a new magic number at $N = 34$ will be tested through Coulomb excitations of neutron-rich ^{50,52,54}Ca and ^{48,50,52}Ar beams with TIGRESS.

Characterization of the Regions Near the Doubly-Closed Shell Nuclei ^{132}Sn and ^{78}Ni

The physics program proposed here focuses primarily on nuclear structure in the neutron-rich region beyond ^{132}Sn where the electron linac will have peak yields. A similar program that reaches beyond ^{78}Ni can be envisioned with a

combination of the electron linac and the high-current proton beam line with an actinide target.

Currently, we have knowledge of ground-state masses in (most neutron-rich nuclei): ^{128}Cd, ^{132}In, ^{134}Sn, ^{135}Sb, ^{137}Te, ^{71}Ni, ^{76}Cu, and ^{78}Zn, and excited states in: ^{130}Cd, ^{132}In, ^{134}Sn, ^{135}Sb, ^{139}Te, ^{74}Ni, ^{76}Cu, and ^{77}Zn. These data are too few or too inaccurate for extrapolations and so we have little idea of what lies beyond. There is a growing body of literature that suggests fundamental ingredients of the shell model may change, for example the spin-orbit force as we know it may break down because of a more diffuse nuclear potential surface gradient in very neutron-rich nuclei. Possibly, with a more diffuse potential, many more states will lie near the Fermi surface and correlations will play a much more dominant role such as halo structure. (There is also the question of correlations involving configurations in the continuum if the Fermi energy is very close to the top of the well.)

The first experimental program will begin with studies of basic properties such as ground-state masses, single-particle states, and the first few excited states in the nuclei selected from ^{133,134,135,136,137,138,139}Sn, ^{131,132,133}In, ^{135,136,137}Sb, ^{130,131,132}Cd, ^{136,137,138}Te. The impact of such studies can be assessed by considering, for example, recent results reported for the excited states in ^{130}Cd [A. Jungclaus *et al.*, Phys. Rev. Lett. 99, 132501 (2007)] and for the mass of ^{134}Sn [M. Dworschak *et al.*, Phys. Rev. Lett. 100, 072501 (2008)], which show that $N = 82$ appears to be a good closed shell in a region where the possibility of "shell-quenching" had been raised to explain deficiencies in the predicted *r*-process abundances. (This has, for the moment, shifted the focus of *r*-process physics to the potential importance of neutron-induced fission "recycling" of actinides.)

Specific experiments will include precise ground-state mass measurements of $^{135-139}$Sn to permit extrapolation to infer the location of the neutron drip line. The recent discovery of an isomer, via a mass measurement of an excited (long-lived) state, in ^{65}Fe shows that isomer exploration, which can be expected to be fruitful in shell-model dominated regions, will be an attractive means for discovering simple, new structures [M. Block *et al.*, Phys. Rev. Lett. 100, 132501 (2008)]. A very important point in this respect is that excited state information for an isotope is obtained without having to produce the β-decaying parent for which yields drop precipitously in the regions very far from stability. An added bonus to the study of very neutron-rich nuclei by β-decay is that there is the appearance of two decay processes by which access to a given nucleus becomes possible: direct β^- decay and β-delayed neutron decay. These generally provide different spin distributions that are of enormous value in elucidating structure.

Complementary experiments to probe the ^{132}Sn region at TRIUMF-ISAC include the systematic precision binding energy measurements with TITAN along isotopic chains starting from ^{119}Pd, ^{122}Ag, ^{129}Cd, ^{133}In, and ^{135}Sn for $N = 82$. The mass measurements will be followed up by systematic single-nucleon transfer ($d,p\gamma$) reactions using SHARC (Silicon Highly-Segmented Array for Reactions and Coulex), TIGRESS, and EMMA (ElectroMagnetic Mass Analyzer) extending from stable nuclei to ^{136}Sn, ^{122}Pd, ^{128}Cd, ^{142}Te, and ^{146}Xe. Combined with β-decay and β-delayed neutron decay studies with the 8π, PACES (Pentagonal Array for Conversion Electron Spectroscopy), and DANTE (Dipentagonal Array for Nuclear Timing Experiments) to determine spin-parity assignments and lifetime measurements of excited states for nuclei

beyond ^{132}Sn, a comprehensive picture of the single-particle states will be obtained.

Similarly, in the $N = 50$ region, precision mass measurements starting with ^{73}Ni, ^{77}Cu, ^{82}Zn, ^{84}Ga, ^{86}Ge, ^{88}As, and ^{90}Se will be pursued. The presence of seniority isomers in the neutron-rich $A = 80$ region will be sought, and the validity of the $N = 50$ shell gap at large neutron excess will be probed through Coulomb excitation studies in the vicinity of ^{78}Ni. Deep-inelastic reactions with rare-isotope beams such as ^{81}Ga will be used to populate high-spin states in nuclei around ^{78}Ni. The high mass resolution of the EMMA spectrometer makes it a powerful device for an extensive program of $(d,p\gamma)$ transfer reactions in conjunction with TIGRESS for γ-ray detection and SHARC for coincident proton detection. An extensive program of such inverse $(d,p\gamma)$ studies at ISAC-II will map the evolution of single-particle states as a function of neutron excess and, in particularly favourable cases such as $d(^{100}\text{Rb},p\gamma)^{101}\text{Rb}$, will be performed on the *r*-process nuclei themselves. Such $(d,p\gamma)$ studies will form an important part of the ISAC-II physics program and will establish ISAC as the world leader in this field.

Nuclear Structure near the $N = Z$ Line

The charge independence of the nuclear force has been a central concept in nuclear physics for more than sixty years. Once account is made for the Coulomb interaction, which is very weak compared to the strong nuclear interaction, charge independence states that the nucleon-nucleon force for the same relative state of motion and spin does not depend on whether one considers protons, neutrons, or a combination of the two. This symmetry, together with the fact that proton and neutron masses are nearly identical, prompted the isospin formalism wherein the two types of nucleon are treated as different states of the same particle that are distinguished by the projection of isospin onto a quantization axis. In reality, the nucleon-nucleon interaction has an isovector contribution (*i.e.*, the $nn \neq pp$ interaction) on the order of 1%, and an isotensor contribution (the average of the *nn* and *pp* interactions $\neq$ the *np* interaction) on the order of 2% of the strength of the isoscalar interaction. However, this causes only a minor perturbation, and the isospin concept is extraordinarily useful for nuclei near the $N = Z$ line.

The breaking of isospin symmetry has important consequences not only for nuclear structure but for the fields of nuclear astrophysics, where isospin partners are often used to predict the locations and natures of levels important in capture reactions, and in fundamental symmetry tests, where the isospin mixing is an important correction that must be applied to Fermi superallowed β-decay rates before the CKM matrix element V_{ud} can be extracted. TRIUMF-ISAC currently has the most intense beams of neutron-deficient nuclei near the $N = Z$ line, and an active program to exploit them, especially for the Fermi superallowed program, is already well underway. With the commissioning of the ISAC-II facility, new avenues of research into $N = Z$ nuclei are opened.

A program of Coulomb excitation, with the aim of investigating isospin symmetry breaking, is planned. These will include Coulomb excitation of heavy isospin $T = 1$, $N = Z$ nuclei such as ^{62}Ga, ^{66}As, ^{70}Br, and ^{74}Rb. The extracted $B(E2;2^+_1 \rightarrow 0^+_1)$ values will be compared to the isoscalar matrix elements from the neighbouring $T_Z = \pm 1$ nuclei. Beam intensities of ~10^3 ion/s are needed; the experiments will use the TIGRESS+SHARC combination,

with the University of York Bragg detector to determine beam composition on an event-by-event basis.

It is well known that $T = 0$, $S = 1$ is the strongest channel of the nucleon-nucleon force. However, the pairing field appears to be dominated by collective $T = 1$, $S = 0$ pairs, rather than $T = 0$, $S = 1$ pairs, even in $N = Z$ nuclei where the latter might naively be expected to play a more dominant role. In heavy nuclei, a collective $T = 1$ pairing field develops and eventually forms a superconducting state. Evidence for a collective $T = 0$ *np* pairing field in nuclei, which until now has remained elusive, will be sought using the (^{3}He,*p*) deuteron-transfer reaction on a series of even-even nuclei into odd-odd $N = Z$ nuclei. Preliminary results using a ^{44}Ti beam at Argonne National Laboratory are promising; however, those studies are limited by the availability of short-lived radioactive beams. At ISAC-II, these studies will be pursued, with ^{72}Kr beams initially, and extended as other even-even $N = Z$ beams become available.

Using a LaC target, a program to probe the Sn nuclei approaching ^{100}Sn will be initiated. These measurements will include Coulomb excitation, where sufficient yields are expected down to ^{106}Sn, that will complement $B(E2)$ values extracted using intermediate-energy Coulomb excitation, and a series of single-nucleon transfer measurements, such as (d,t), to extract the locations of the single-particle strengths in the neighbouring odd-mass nuclei. These studies can also be complemented by the decay of neutron-deficient Sb isotopes using the 8π spectrometer, and later GRIFFIN. Fusion-evaporation reactions using the TIGRESS spectrometer combined with the EMMA recoil spectrometer will also be used to probe high-spin states near ^{100}Sn. The reactions using ^{56}Ni, ^{66}Ge and ^{63}Ga beams, obtained from a high-power ZrC spallation target, with a ^{40}Ca target, are particularly attractive.

What Are the Mechanisms Responsible for the Organization of Individual Nucleons into the Collective Motions that Are Observed?

In many complex systems, simple patterns may emerge. In nuclei, which may contain hundreds of individual nucleons, rather than displaying chaotic energy spectra, they often show remarkably simple excitation spectra at low energies. The emergence of the simple patterns is often related to underlying symmetries in the Hamiltonian. The phenomena of pairing, discussed above in the context of halo nuclei, is one example of this. Nuclei also organize (approximately) into different shapes and may possess surface vibrational modes. Spherical even-even nuclei away from closed shells are often labelled as vibrational because their low-lying spectrum can resemble that of a simple harmonic oscillator, while deformed nuclei are labelled as rotational since their spectrum resembles that of a quantum rotor. While models can account for some of the observables of these modes, a long-term challenge has been the transitional regions where the shape undergoes a rapid change. A prime exam-

ple of this is the $N = 90$ region where there is a rapid change in the shape of the ground state as the neutron number increases from $N = 88$ to $N = 92$.

Since many nucleons participate in the development of collective phenomena, there could be a saturation effect. Nuclei near the mid-shell, which have the maximum number of valence protons and neutrons, would be expected to have the maximum collectivity. One may thus expect that a nucleus like ^{170}Dy, with $Z = 66$ and $N = 104$, would have the greatest degree of deformation. However, the lighter Gd isotopes have a greater deformation than their Dy isotones, prompting the idea that there could be a saturation effect.

Nuclei with well-deformed shapes typically possess a symmetry axis, and the projection of angular momentum onto this symmetry axis is the K quantum number. The degree to which K is conserved, *i.e.*, the "goodness" of this quantum number, gives a direct indication of the nuclear shape, and mixing effects, such as the Coriolis force. The most sensitive way to probe the degree of violation of K is the measurement of the decay of K isomers. These isomeric states result from a unique combination of single-particle orbitals that lie relatively low in excitation energy and that have large spin components projected onto the symmetry axis. One of the best regions of the nuclear chart to investigate K isomers is the mass 170–190 region.

Studies of Collectivity in Nuclei

A powerful spectroscopic tool that is beginning to be used in the study of collectivity in nuclei far from stability is multiple-step Coulomb excitation. An excellent recent example of the power of this spectroscopic tool is an investigation of the very neutron-deficient Kr isotopes [E. Clement *et al.*, Phys. Rev. C75, 054313 (2007)]: however, major issues of shape coexistence are unresolved. The problem is that coexisting structures mix and can give rise to complex and misleading patterns of excitations and decay. A powerful spectroscopic technique for identifying mixed, coexisting configurations is the observation of electric monopole transitions. These transitions afford a model-independent view of mean-square charge transition moments in nuclei, and these moments are strongly enhanced by the mixing of coexisting configurations with different shapes (which have different mean-square charge radii).

The combination of studies with the 8π-PACES array and with TIGRESS offers a multi-spectroscopic approach to the collective structure of nuclei away from the stability line that ranks among the very best spectroscopic capabilities currently available anywhere. The 8π-PACES array is able to provide detailed spin-parity information on excited states through γγ angular correlation studies and internal conversion electron studies with coincidence gating for γγ, γe^-, $e^-\gamma$, and e^-e^- combinations.

TIGRESS, in combination with BAMBINO or Super-CHICO and higher energy secondary beams will offer $E2$ matrix elements via multi-step Coulomb excitation, from which important constraints on the low-energy collective response of any given nucleus can be obtained. The β-decay studies with the 8π spectrometer and its auxiliary detection systems can be performed with beam intensities as low as ~1 ion/s. The new high-efficiency γ-ray spectrometer GRIFFIN will provide a 20-fold increase in absolute γ-ray efficiency, representing a 400-fold increase in γγ coincidence experiments. GRIFFIN will allow detailed structure studies for exotic isotopes produced with intensities below 0.01 ion/s.

The $N \approx Z$ nuclei in the region of ^{68}Se–^{80}Sr display rapid changes of nuclear structure associated with the coherent effects of proton and neutron wave functions, and Coulomb excitation with TIGRESS+SuperCHICO at ISAC-II of nuclei such as ^{68}Se, ^{70}Br, ^{72,74}Kr, ^{74}Rb, and $^{76-80}$Sr will probe shape co-existence in this region (in addition to probing isospin purities as outlined above). Using the high-power Nb target, fusion evaporation reactions such as ^{75,76}Rb+^{58}Ni will be used to populate high-spin states in the vicinity of ^{130}Sm. This particular region is predicted to have very large ground-state deformations with β_2 ~0.4 but is currently out of reach at stable-beam facilities due to their extremely low production cross sections. Deep-inelastic reactions with beams such as ^{81}Ga, ^{94}Kr, and ^{97}Rb impinging on ^{208}Pb or ^{238}U targets will efficiently populate even more neutron-rich systems and allow for studies of nuclear shell structure and deformation in the extremely neutron-rich $N = 50$ and $N = 60$ regions of the chart of the nuclides. These studies will require the fabrication of a large-acceptance, solenoid-based spectrometer to detect and identify the reaction products.

The Cd nuclei have been used as paradigms of vibrational motion, and the stable isotopes have been the subjects of many very detailed spectroscopic investigations. These have revealed the possible breakdown of the vibrational interpretation, but systematic studies must be extended into the neutron-rich region, including the neutron-rich Pd isotopes to fully map out the nature of the collectivity and influence of the intruder states. These systematic studies include the β-decay of neutron-rich Ag and Rh isotopes with the 8π spectrometer and its associated auxiliary detectors, and multistep-Coulomb excitation with TIGRESS and SuperCHICO. As $N = 82$ is approached, these studies will benefit from the high-purity beams provided by photo-fission driven by the e-linac.

An intensive program has been initiated to probe the shape transitional $N = 90$ isotones, and these studies will be extended to the neutron-rich ^{148}Ce, ^{146}Ba, and ^{144}Xe. Nuclei near $Z = 64$ and $N = 90$ have recently been suggested as examples of nuclei possessing tetrahedral magic numbers, with a signature of the vanishing of the $E2$ transitions near the rotational band heads, requiring their probing with multi-step Coulomb excitation. Regions of shape coexistence also include the neutron-deficient Pb and Bi isotopes. Although shape coexistence has been established in these nuclei, it is based on incomplete data; conclusive proof rests in the measurements of enhanced $E0$ transitions that can be measured with the 8π-PACES array. Other future studies include an investigation of the saturation of nuclear collectivity in well-deformed rare-earth nuclei near mid-shell by performing measurements to determine low-lying level schemes and lifetimes in the neutron-rich Gd and Dy isotopes. A search for high-K isomers in the neutron Hf, Tm, and Lu isotopes will continue, with the ultimate goal of discovering the long-lived $K = 18^+$ isomer in ^{188}Hf.

Nuclear Structure for Fundamental Symmetry Tests

A number of fundamental processes of nature occur in nuclei in a manner that permits high precision quantification. One of the first was the proof of parity violation by the weak interaction. A long-running topic of investigation has been the CVC theory of the weak interaction and the unitary of the CKM

matrix, observed through precision measurements of superallowed Fermi β-decay. Indeed, a significant thrust in the physics program at TRIUMF-ISAC in the past seven years has been the characterization of a number of half-lives and branching ratios associated with superallowed Fermi β-decay.

Work remains to be done to fully exploit the unique capabilities at ISAC:

- *Q*-values measured with TITAN to a relative precision of 10^{-9} for ^{10}C, ^{66}As, ^{70}Br, ^{74}Rb, and ^{78}Y.
- High-precision branching ratio and $T_{1/2}$ measurements of ^{46}V, ^{50}Mn, ^{66}As and ^{70}Br
- High-precision $T_{1/2}$ measurements of ^{10}C and ^{14}O.

Two new lines of investigation into nuclear structure for tests of fundamental symmetries will become possible at TRIUMF-ISAC with the implementation of the actinide target with a second proton beam line and the electron linear accelerator. The first is the quest for the observation of a non-zero electric dipole moment in an atom. The second is extracting values for the masses of the neutrinos from neutrinoless double-β-decay (if neutrinos are Majorana particles).

Discovery of an Atomic Electric Dipole Moment

The electric dipole moment (EDM) quest focuses on a choice of atomic species most likely to exhibit a measurable effect. Heavy atoms that possess nuclei with large octupole moments are the best prospect. The best potential cases are in the very neutron-rich Rn isotopes (with A ~223).

The first step is to establish best cases of octupole deformation. This will need detailed spectroscopy of the most promising isotopes using multistep-Coulex with TIGRESS and detailed radioactive decay schemes of the astatine parent nuclei with the GRIFFIN-PACES arrays. To study ^{223,225}Rn with sufficient detail, rates of ~10^6 nuclei/s of the At parents are required. This will require currents on the order of ~10 μA on the proposed actinide target. When the best candidate octupole-deformed nucleus is identified, the atomic EDM measurement will follow with dedicated beam time for ~100 days of running.

Nuclear Matrix Elements for Extracting Neutrino Masses

The determination of neutrino masses from neutrinoless double-β-decay is fundamentally dependent on the calculation of the nuclear matrix element with sufficient precision. Low-precision calculations will indicate the mass regime in which the three-neutrino masses reside while high-precision calculations will determine the hierarchy of the three masses.

This undertaking will be one of the toughest challenges ever to nuclear theory because of the fundamental nature of the process. To do this will require very reliable theories of ground-state wave functions, and of excited states. The challenge is that the double-β-decaying parent-daughter candidate pairs are in mass regions where models of nuclear structure are not that reliable. A leading example is the ^{76}Ge/^{76}Se pair. This region has very complex pair structure and coexisting shapes [E. Clement *et al.*, Phys. Rev. C75, 054313 (2007)].

Such features render the commonly used collective-model theories questionable and the shell model approach too narrow (truncated).

The accessibility of intense beams of neutron-rich nuclei from the high-power photo-fission driver naturally match all the leading cases for investigation of neutrinoless double-β-decay from ^{76}Ge/^{76}Se to ^{150}Nd/^{150}Sm, as the neutron-deficient isobars are not produced. In particular, very detailed studies of the collective behaviour of ^{76}Ge and ^{150}Nd will be undertaken via the radioactive decay of ^{76}Ga and ^{150}Pr using the 8π-PACES arrays. Recent studies have revealed that our knowledge of the structure of the candidate isotopes, is seriously lacking with respect to calculating double-β-decay matrix elements [J.P. Schiffer *et al.*, Phys. Rev. Lett. 100, 112501 (2008)].

Electron capture/beta (EC/β) branching ratios also provide a sensitive test of the theoretical calculations of the nuclear matrix elements need to describe neutrinoless double-β-decay. Currently, for most cases the electron capture branching ratios are poorly known due to their small value on the order of $\leq 10^{-3}$. Conventional techniques have reached a limit of sensitivity, so a new experiment using a novel approach is being set up at TITAN to determine these branching ratios [J. Dilling *et al.*, Can. J. Phys. 85, 57 (2007)]. Initial measurements for ^{100}Tc will allow a direct comparison between this novel method and conventional techniques. Ultimately, further EC/β branching ratio measurements are planned for other isotopes of relevance for neutrinoless double-β-decay experiments such as ^{110}Ag, ^{114}In, ^{150}Nd, and ^{76}As.

Conclusion

There are real opportunities to advance our understanding of the nuclear many-body problem and how it changes as we vary the number of neutrons and protons. TRIUMF has the talented people, award winners like Prof. C. Svensson. TRIUMF has the experimental facilities, world leading facilities like TIGRESS and TITAN. With the proposed upgrade to ISAC, TRIUMF will have the beams, an unparallel collection of rare-isotopes beams. The next decade at TRIUMF promises to be one of unequalled achievement in nuclear physics.

6.2.1.1.3

Nuclear Astrophysics

6.2.1.1.3.1

Introduction to Nuclear Astrophysics

One of the key motivations for the original ISAC facility was the exploration of nuclear astrophysics. In addition to the ISAC-I accelerators, major experimental facilities like DRAGON (Detector of Recoils And Gammas Of Nuclear Reactions), TUDA (TRIUMF UK Detector Array), and TACTIC (TRIUMF Annular Chamber for Tracking and Identification of Charged Particles) were constructed. Notable successes, which include the measurement of the ^{21}Na(p,γ) reaction cross section, the measurement of ^{26}Al(p,γ), and the measurement of ^{40}Ca(α,γ), have demonstrated that the combined capabilities of high-intensity beams and good instrumentation produce important physics results. Never the less DRAGON and TUDA have been negatively impacted by the general lack of beam time. However, TRIUMF remains firmly committed to the nuclear astrophysics program, and this Five-Year Plan proposes upgrades to the ISAC facility that will improve the level of productivity.

The main challenges facing the astrophysics program are the same as those of the rest of the ISAC program: lack of beam time and the lack of availability of the appropriate beams. The problem is especially acute with the DRAGON facility. It was designed to measure low-energy cross section reactions and, consequently, its experiments tend to be run significantly longer (from four to six weeks) and require the highest intensities of all the ISAC experiments. Some of the fundamental symmetry experiments share the same difficulties,

and the long beam times these experiments require can only be met if an additional beam line and a target station are built.

The availability of the appropriate beams is also particularly acute for DRAGON because the most important beams for it require a lot of development work. For example, attempts by both TRIUMF and the Oak Ridge National Laboratory to develop a ^{25}Al beam for the reaction ^{25}Al$(p,\gamma)^{26}$Si have not been successful. ISAC is at the forefront of all ISOL facilities, so a lot of development work must be carried out and carried out in a novel regime. The search for the appropriate target materials and ion sources is partly trial and error and must be done at the high beam power only available at ISAC. It is important to try different materials and ion sources, and these attempts require experimenters to be able to change targets quickly, a property the current target stations lack.

The proposed new beam line, with the capability to change targets quickly, would significantly increase the productivity of the astrophysics program. First, the astrophysics program would benefit from the general increase in beam time. Second, higher currents on conventional, non-actinide targets in the new target station would be especially useful for the low cross section measurements typical of DRAGON. Third, the ability to change targets quickly would permit better beam development without as much disruption to the ongoing program.

In the next subsection, we present the science case for an extension of the current program in the region of neutron-deficient nuclei. This program will greatly benefit from the proposed upgrade of the ISAC facility, and its continuation is part of the justification for the upgrade. The subsequent subsection discusses a new astrophysics program that would be possible using the neutron-rich isotopes that will become available with an actinide target from either a proton or electron driver. Since the neutron-rich astrophysics program is new, more consideration is given to the general motivation for that program than for the ongoing astrophysics program.

6.2.1.1.3.2

Nuclear Astrophysics with Neutron-Deficient Nuclei

Introduction

The astrophysics program at ISAC utilizes rare-isotope and stable beams to investigate a variety of nuclear properties and reactions relating to processes on the neutron-deficient side of stability. In this area, TRIUMF is unique: we not only have the production capability for short-lived rare-isotope beams, but also the unique ability to accelerate intense beams up to and beyond astrophysical energies coupled to a variety of top-class experimental facilities ready to exploit them. The ongoing program can be split into several areas of importance for different astrophysical processes or stellar scenarios, such as explosive hydrogen and helium burning in novae and X-ray bursts, the *p*- and ν*rp*-processes in core collapse supernovae, and quiescent stellar burning or nucleosynthesis after the Big Bang. These areas of study are shared amongst these experimental facilities: DRAGON (Detector of Recoils And Gammas Of Nuclear reactions), TUDA (TRIUMF UK Detector Array), TACTIC (TRIUMF Annular Chamber for Tracking and Identification of Charged Parti-

cles), TITAN (TRIUMF's Ion Trap for Atomic and Nuclear Science), and DSL (the Doppler-shift Lifetime Facility). In addition, we have prospects for future work at facilities based at ISAC-II such as TIGRESS (TRIUMF-ISAC Gamma-Ray Escape Suppressed Spectrometer), SHARC (Silicon Highly-Segmented Array for Reactions and Coulex), and EMMA (ElectroMagnetic Mass Analyzer).

Stellar Characteristic Gamma-Ray Emitters and Nova Grains

Space-based γ-ray telescopes such as the INTEGRAL satellite are attempting to probe astrophysical objects through the signatures of nucleosynthesis processes: either the flux of 511 keV γ-rays produced by annihilation from β+ decaying isotopes formed in stellar events, or via characteristic γ-ray lines from individual radioisotopes. Short-lived (on astronomical scales) nuclei that are predicted to be prolifically produced in certain stellar events, such as ^{13}N, ^{18}F, ^{22}Na, and ^{44}Ti, can become potential observables for individual sources, giving us a powerful look into the internal processes of explosive stellar events. Integrated signals from longer-lived diffuse galactic radioactivity such as ^{26}Al or ^{60}Fe can give us another observational constraint on models of stellar evolution, explosion, and galactic chemical evolution. So far, characteristic γ-rays from ^{26}Al, ^{60}Fe, and ^{44}Ti have been observed, for example, an individual supernova (Cas A) remnant containing detectable ^{44}Ti flux.

The reactions that create and destroy these radioisotopes in explosive scenarios are crucial inputs to astrophysics models that simulate these events and predict their observables. Eliminating the nuclear physics uncertainties in these nuclear reaction rates by laboratory measurement can give us a powerful direct link between the models and observation. This in turn can help us answer questions such as why we haven't seen any signal from ^{22}Na in classical novae yet, despite strong predictions otherwise, or why the ^{26}Al in the galaxy appears to be correlated with massive star production even though some models suggest a strong nova, Wolf-Rayet phase or an AGB star contribution.

The important nuclear reactions that play a role in determining the ejected abundances of these isotopes are usually proton- or alpha-capture reactions and are therefore prime targets for study using the DRAGON recoil separator. So far, the majority of DRAGON experiments have been oriented towards measuring the strengths of these important reactions such as ^{26g}Al(p,γ)^{27}Si, ^{21}Na(p,γ)^{22}Mg, ^{23}Mg(p,γ)^{24}Al and ^{40}Ca(α,γ)^{44}Ti; however, many unmeasured reactions remain. In particular, one high priority is the ^{25}Al(p,γ)^{26}Si reaction, the final unmeasured rate that affects ^{26}Al production in novae. Other reactions needed for the prediction of 511 keV γ-ray signals in novae are ^{13}N(p,γ), ^{17}F(p,γ), and ^{18}F(p,γ). In addition to the ^{21}Na(p,γ), ^{26}Al(p,γ), and ^{23}Mg(p,γ) studies already underway or completed at DRAGON, the measurement of these reactions will ensure that the abundances of γ-emitting radioisotopes in classical nova are based entirely on precision experimental measurement, rather than theoretical estimates of insufficient accuracy.

The quantity of the isotope ^{44}Ti, which is seen in supernova remnants, is sensitive to a network of nuclear reactions not firmly based on experiment. One example is the important ^{45}V(p,γ) reaction, which can be measured at

DRAGON and which complements the study of the direct ^{44}Ti production reaction ^{40}Ca(α,γ) already being measured at DRAGON. The important ^{44}Ti(α,p) reaction may also be measurable either directly at the TUDA facility, or via indirect or reverse reaction techniques. The experimental determination of all of these reaction rates is one of the highest scientific priorities of the DRAGON program and provides one of the strongest links between theory and observation in the field of astrophysics.

Several pre-solar grains have been identified that show isotopic ratios characteristic of the kind of nucleosynthesis that occurs in classical novae. It is speculated that these grains may have condensed out of material fresh with the imprint of explosive hydrogen burning nucleosynthesis in a classical novae. Crucial to the identification of these grains as nova candidates, and a potential powerful tool for constraining the physical models of novae, are particular isotopic ratios in these grains such as ^{28}Si/^{30}Si or ^{32}S/^{33}S. These ratios should bear the mark of nova nucleosynthesis with abundance ratios vastly different than seen in conventional grains borne out of bulk galactic nucleosynthesis. Only a few (p,γ) reactions contribute to these isotopic ratios, and their strengths are known either only partially by experiment, or almost entirely by theory, with considerable error in all cases. These reactions must be measured directly using the DRAGON facility to constrain the abundance ratios. Most important of these is the ^{30}P(p,γ) reaction, which determines the ^{30}Si/^{28}Si ratio in the nova ejecta and can give ratios of up to 40 to 100 times the solar ratio for some O-Ne nova models. Also of importance is the ^{33}Cl(p,γ) reaction, which complements the ^{33}S(p,γ) study already performed at DRAGON, and is needed to constrain the ^{33}S/^{32}S ratio in the models, which is a potential signature for nova grains.

CNO Cycles, Breakout, and Energy Generation in the *rp*-process

The CNO cycles and their subsequent breakout within explosive burning scenarios are crucially important for a variety of reasons. The cold CNO cycle generates energy within all more massive stars, and certain reactions have considerable influence on stellar evolution on the main sequence that is vital to the understanding of globular clusters and the age of the universe. The hot-CNO cycles are exited via breakout reactions which occur at high temperatures such as in X-ray bursts and which lead to the *rp*-processes, thus synthesizing some heavier elements and dictating the thermonuclear energy released in the process. The sensitivity of various global X-ray burst properties such as periodicity, amplitude and duration to individual nuclear reactions is astonishing and leads to the requirement of precise, direct measurements of these rates to constrain models and lead to a proper understanding of the underlying physics of these powerful cosmic events. Such reactions can be determined via direct measurement at the TUDA facility and also accessed using indirect techniques such as measurement of excited state lifetimes, reaction spectroscopy, or time-reversed approaches.

CNO Cycles

As previously mentioned, the CNO cycle is vital to the understanding of main-sequence stellar burning, in particular the main-sequence turn-off which is a

critical parameter to understanding the relationship to the ages of globular clusters, which are often used as an indicator of the lower limit of the age of the universe. The transition from the hot-pp chain into the CNO cycle is also only partially understood experimentally. Measurement of the $^{11}C(p,\gamma)$ reaction, which is involved in this transition, is crucial for the understanding of the evolution of very low metallicity stars, a much discussed topic in astronomy at present. The $^{13}N(p,\gamma)$ reaction, dominated at these temperatures by a direct-capture component, is another important link in the CNO cycle that requires direct measurement. Lifetime measurements of the relevant excited states in some of the nuclei involved in the CNO cycle can provide a determination of resonance strengths if the state spin and parity are known, and the particle branching ratio can be derived from elsewhere. An example is the case of the $^{14}N(p,\gamma)$ reaction, where the extrapolations to stellar energies depend sensitively on *R*-matrix fits to resonances. Because of the importance of this particular reaction for the main-sequence turn-off, precision measurements of the ^{15}O excited states involved can help constrain the fits and provide extra confidence in the data.

Breakout from the Hot-CNO Cycle

The breakout from the CNO cycle in X-ray bursts is dominated by the $^{18}Ne(\alpha,p)$ reaction, in the sense that this reaction provides a bottleneck through which all mass is expected to flow. Although this reaction has been the focus of some limited study over the years, considerable disagreement exists between attempted direct measurements and reverse reaction techniques. With ^{18}Ne intensities improving annually at ISAC, the TUDA facility is uniquely poised to measure this reaction, complementing by reverse reaction techniques using the TIGRESS or TUDA facility at ISAC-II, and measuring alpha strengths of the relevant states via transfer reactions.

The most important reaction contributing to the breakout from the hot CNO cycle is $^{15}O(\alpha,\gamma)$, which drives the thermal instability in the accreting H/He-rich region that allows the $^{18}Ne(\alpha,p)$ reaction to take over. Thus, whether a given accreting neutron star results in a thermonuclear type 1 X-ray burst at all depends very sensitively on the strength of the $^{15}O(\alpha,\gamma)$ reaction. It has been shown in many theoretical studies that simple scaling of this rate can drastically affect the shape and periodicity of the generated X-ray luminosity curve (the primary observable), while theory also suggests that X-ray binaries with all accretion rates up to the Eddington rate should result in bursts. This theory is at odds with observation, in which bursts are only seen up to about 30% of the Eddington rate.

The DRAGON facility was built with this reaction in mind and is the only facility in the world poised to measure it. DRAGON will be able to measure this rate once a ^{15}O beam of sufficient intensity has been developed at ISAC. The presence of a new specialized actinide beam line at ISAC will enable faster development of such a beam. The direct measurement of this reaction will allow, for the first time, X-ray burst modellers and astronomers to disentangle the effects of nuclear physics and scenarios such as turbulent mixing, magnetic fields, and localized accretion on the bursts.

The α*p*- and *rp*-processes

After breakout from the hot-CNO cycle, nucleosynthesis up to tellurium and subsequent energy generation can proceed via a set of rapid proton captures and β+ decays: the *rp*-process. Because the accreting material also typically contains helium, these proton captures compete with a series of (α,*p*) reactions: the α*p*-process. The burst properties are sensitive to waiting points in the *rp*-process, specifically at points where small proton separation energies inhibit further net flow to heavier nuclei and where the path must wait for β+ decay before proceeding further. Such waiting points occur at ^{64}Ge, ^{68}Se, and ^{72}Kr.

The important nuclear properties required for laboratory measurement in the α*p*- and *rp*-processes are ground-state masses of nuclei right out to the drip line, their half-lives, and the rates of (*p*,α) and (α,*p*) reactions. For example the mass of ^{64}As is a critical parameter for this process. Although (*p*,γ) and (α,γ) reactions are less important at these high temperatures because of the quasi-equilibrium nature of the flow, they may become significant in certain cases near waiting points, for example, ^{57}Cu(*p*,γ), ^{65}As(*p*,γ), and ^{69}Br(*p*,γ). For cases where beams of sufficient intensity can be generated at ISAC, the (*p*,γ) rates can be measured at the relevant energies using DRAGON. Otherwise, a host of indirect techniques can be used to determine experimentally the rates using TIGRESS, EMMA, SHARC, or TUDA. The important (α,*p*) reactions can either be attempted directly at the TUDA facility using a gas target, if sufficient beam intensity is available, or attempted indirectly via the reverse (*p*,α) reaction combined with inelastic scattering and γ-spectroscopy studies at TIGRESS. Ground-state masses relevant to the *rp*-process are a prime target for the TITAN facility, and lifetimes can be measured via implantation using the 8π spectrometer.

Quiescent Stellar Burning and Big Bang Nucleosynthesis

Elements from carbon to calcium are formed in quiescent stellar burning, while elements from scandium to zinc are made in the statistical thermal equilibrium found both in core collapse and thermonuclear supernovae shortly before explosion. The quiescent burning does not (with a very few exceptions for longer-lived isotopes) involve radioactive isotopes because typical capture times are much longer compared to those of typical beta decays. Stable nuclei are also involved in some of the reactions occurring in novae. Typically, in quiescent stellar burning, the stellar burning temperatures are so low that the cross sections encountered are often not accessible to direct measurement. The DRAGON facility has been involved in the measurement of some of the reactions of quiescent stellar burning, most notably ^{12}C(α,γ)^{16}O.

The sun is in a stage of quiescent hydrogen burning involving the *pp* chain because of its relatively low mass. The closeness of the sun allows the observation of the neutrino flux emanating from its core where the nuclear burning takes place. This observation has led to the discovery of neutrino oscillations and, as a consequence, the neutrino mass. TRIUMF is involved in the measurement of the most important reaction for the determination of high-energy neutrino flux from the sun, the ^{7}Be(*p*,γ)^{8}B reaction.

The isotope ^{7}Be is radioactive, with a laboratory half-life of 53 days. Therefore, either a radioactive beam or a radioactive target is required. For the measurement of the ^{7}Be(p,γ)^{8}B reaction, a target has been produced at TRIUMF; however, as very thin targets are required for the measurement of the elastic proton scattering, a ^{7}Be beam will be required. This measurement will determine the optical potential of ^{7}Be+p and will therefore improve the extrapolation of the ^{7}Be(p,γ)^{8}B cross section to the energies found in the solar burning. The elastic experiment experiment will be performed using the TACTIC detector.

During the first minutes of the Big Bang, a handful of light isotopes were synthesized, the most heavy one of any significant amount being ^{7}Li. The isotope ^{6}Li is, however, not expected to have been produced in any measurable amount. Nevertheless, there is stellar evidence that the primordial ^{6}Li amount may be around 20% of that of ^{7}Li. This evidence has renewed interest in the synthesis of ^{6}Li, and we plan to measure the ^{7}Li(^{3}He,α)^{6}Li and ^{3}He(t,γ)^{6}Li reactions at TACTIC or a similar set-up.

The Formation of the *p*-Nuclei

The *p*-process

The *p*-nuclei is the name given to the group of 35 neutron-deficient stable isotopes ranging from ^{74}Se to ^{196}Hg that stand separated, by short-lived isotopes, from the line of stability and remain unreachable by neutron-capture processes. The production of these isotopes was traditionally attributed to a so-called *p*-process, which is now sometimes called the γ-process. In this process, a medium already enriched by the *s*-process undergoes high-temperature and density conditions such as those in core-collapse supernovae, and the p-nuclei are reached via a series of photodistintegration reactions, in particular (γ,n), (γ,p), and (γ,α). These reactions allow the formation of lighter *p*-nuclei from the heavier *s*-process ashes, the crucial nuclear physics details being the branching points where the charged-particle reactions start to compete with the (γ,n) reactions. Models of the *p*-process can produce abundances only to within a relatively large factor of the observed abundances.

As in any quasi-equilibrium flow, the reaction *Q*-values and therefore masses of the relevant nuclei play an important role, but the details of the branching ratios remain mostly undetermined. In principle, the rates of the (γ,p) and (γ,α) reactions can be determined partially by measuring the reverse, (p,γ) and (α,γ) rates at the relevant energies, and applying the detailed-balance theorem, requiring knowledge of ground-state spin-parities for all nuclei involved.

Large compilations of (p,γ) and (α,γ) reaction cross sections that are required for experimental investigation for the *p*-process do exist, but these have focused on cases where the target nucleus is stable (although the final nucleus, which would be the target nucleus in the corresponding (γ,p) or (γ,α) reaction, can be unstable). Many international laboratories seek to attempt measurement of these radiative capture rates, or to determine the particle alpha potentials for input into statistical model codes which would lead to a tighter constraint on theoretical predictions for unmeasured reactions.

Many important reactions of interest will involve radioactive nuclei. When a large number of these and stable nuclei become available at ISAC from ISOL

targets, many of the important properties pertaining to the *p*-process can be measured. The DRAGON facility can theoretically measure (p,γ) and (α,γ) cross sections in the region $A_{\text{target}} = 80–90$, providing the recoil charge state is boosted before entering the recoil separator, up to centre-of-momentum energies of 1 MeV. Energies higher than this can be accessed by making relatively small modifications to the bending magnets and electrode voltages in the separator. However, the facility can make a start on measuring some of the lighter important capture reactions on stable and radioactive targets such as ^{80}Se(p,γ), while properties of other relevant nuclei can be investigated at the higher energies available at ISAC-II using a variety of experimental techniques.

The ν*rp*-process

Another potential contributor to the creation of the *p*-nuclei has recently been shown to be a primary process, *i.e.*, one not relying on the previous formation of seed *s*-process nuclei, similar to the *rp*-process that may take place in proton-rich outflows at early times in a core-collapse supernova. Although the environment at this time is proton-rich, the key to this process has been realizing that a small abundance of free neutrons is produced by the effects of neutrino (and electron) interactions with protons. Thus, the traditional waiting points in the *rp*-process, at which the proton separation energies are sufficiently small so that net flow to higher masses is inhibited, can be bypassed by (n,p) reactions with characteristic timescales many times faster than the equivalent β^+ decay. This effect ensures that this ν*rp*-process can synthesize nuclei right up into the intermediate *p*-nuclei region, including the molybdenum and ruthenium nuclei that traditionally present problems for the *p*-process.

It has been shown recently that the abundances of individual *p*-nuclei, such as ^{92}Mo and ^{94}Mo, are critically sensitive to just a few proton separation energies in the ν*rp*-process flow, particularly in regions where forward flow is inhibited due to small proton separation energies and in which the path is diverted into neighbouring isotones. Some experiments have been performed in Finland and at Argonne, but these remain solely based on theoretical extrapolations with r.m.s. errors of the order 500 keV; mass measurements at the critical points are necessary to define the resulting abundances which are sensitive to individual proton separation energies at the level of 100 keV. This region of the nuclear chart is therefore a prime target for the TITAN facility. Because this process has only recently been considered, systematic studies of all the sensitive proton separation energies have not been fully explored.

As well as measuring masses, the strengths of the crucial (n,p) reactions at the critical waiting points have never been studied and require experimental attention, resulting in the prospect of a wide variety of structure and reaction spectroscopy prospects for the proton-decaying states of interest in the radioactive compound nuclei using facilities such as TIGRESS and EMMA, and a variety of available detectors.

6.2.1.1.3.3

Nuclear Astrophysics with Neutron-Rich Nuclei

The Origin of the Heavy Elements

The origin of the heavy elements is universally acknowledged to be one of the most important unsolved problems in all of science. The present evidence indicates that roughly half of the elements heavier than zinc (atomic mass number $A \sim 70$) are synthesized in a series of rapid neutron capture reactions interspersed with photodisintegrations and β-decays known as the *r*-process. This production mechanism involves highly unstable, neutron-rich nuclei that can't be found on Earth.

At least two distinct neutron capture processes are thought to be responsible for the production of nearly all the heavy elements ($A > 70$), the slow (*s*) and rapid (*r*) neutron capture processes. The adjectives slow and rapid describe the average pace of neutron captures in the processes relative to the β^- decay lifetimes typical of the nuclei involved. The *s*-process hews close to the valley of β stability and involves neutron captures that are slower than the β^- decay rates of the nuclei that participate. Hence the nuclei involved are stable or have rela-

tively long β decay lifetimes and can be fashioned into targets and bombarded with neutrons to determine their capture rates and expected abundances. In contrast, the *r*-process is a series of rapid neutron captures that takes place in a hot environment with an extraordinarily high density of free neutrons ($> 10^{20}$ cm^{-3}), combined with a series of β^- decays that bring the newly formed, neutron-rich nuclei closer to the valley of β stability. The *s*-process has at least two distinct components, one responsible for producing light and another for heavy elements. Similarly, abundance differences between light and heavy *r*-process nuclei found in primitive meteorites led to the idea that there are at least two distinct *r*-process components or sites [G.J. Wasserburg, *et al.*, Ap. J. 466, L109 (1996)].

Recently, astronomical observations of the stellar halo of the Milky Way Galaxy have revealed the presence of stars that have infinitesimal yet measurable abundances of Fe and heavy neutron-capture elements compared to those of the Sun. As the formation of these heavy elements is associated with stellar evolution, these iron-deficient or metal-poor halo stars have hardly been enriched with the iron produced in supernova explosions and therefore are among the oldest observed stars in the galaxy. Nevertheless, the fact that they contain heavy elements such as U and Th that can only be produced in the *r*-process implies that an earlier generation of stars synthesized and ejected the *r*-process elements into the interstellar medium. Spectroscopic observations of these metal-poor stars reveal nearly identical abundance distributions for the heavy *r*-process elements with $A > 130$ [J. J. Cowan and C. Sneden, Nature 440, 1151 (2006)]. Hence metal-poor halo star observations support the hypothesis of two *r*-process sites, exhibiting a consistent *r*-process element abundance pattern for nuclei with $A > 130$ (the main *r*-process) but considerable variations for nuclei with $A \leq 130$.

Two astrophysical *r*-process sites, core-collapse supernovae and neutron star mergers, have been modeled extensively. The presence of heavy ($A > 130$) *r*-process nuclei in metal-poor stars that are at least 10 Gyr old represents strong circumstantial evidence that the main *r*-process nuclei were formed in a site associated with massive stars. This is because massive stars have short lifetimes of 10 Myr or less and would have been able to produce and disperse the heavy elements quickly enough to account for their presence in the oldest metal-poor halo stars. In contrast, neutron star mergers require sufficient time for both stars in a binary system to evolve into neutron stars and then spiral into one another. This scenario requires longer timescales, and the neutron star merger rate is small enough that they do not appear promising as an explanation of the *r*-process enriched halo stars. However, all the detailed astrophysical models constructed to date fail to produce conditions that lead to a robust *r*-process that can successfully account for the elemental abundances observed in old stars and the solar system. Given the uncertainty in the astrophysical site, experimental and observational constraints are crucial. Dynamical calculations of the core-collapse supernova scenario suggest that a wide range of correlated parameters such as neutron density and entropy can result in *r*-process nucleosynthesis, so it is presently impossible to uniquely specify the astrophysical conditions that obtain during the process.

For this reason, *r*-process calculations are typically performed in an astrophysical site-independent waiting point approximation [*e.g.*, K.-L. Kratz *et al.*, Ap. J. 662, 39 (2007)]. This approximation assumes that the temperature and neutron density are so high that, for a given element, neutron captures proceed

rapidly until reaching an isotope whose neutron separation energy is so low that its neutron-capture rate is in equilibrium with the photodisintegration rate of its neutron-capture daughter. This $(n,\gamma) - (\gamma,n)$ equilibrium implies that the neutron captures within an isotopic chain halt at waiting point nuclei that must β-decay before further neutron captures can occur, synthesizing heavier nuclei. Once the free neutrons are exhausted, or the temperature drops sufficiently, the neutron-capture reactions fall out of equilibrium with the corresponding photodisintegrations (freeze-out), and the remaining nuclei β-decay back toward stability. These waiting point nuclei are said to lie in the *r*-process path or be *r*-process progenitors since at the time of the freeze-out, the vast majority of the isotopes of a given element are the waiting point nuclei.

In addition to β-decay lifetimes, the identities of the waiting point nuclei depend principally on their neutron separation energies S_n, and the temperature and neutron density of the environment, which determine the abundances in an $(n,\gamma) - (\gamma,n)$ equilibrium. Since the astrophysical site of the *r*-process remains unknown, the temperature is uncertain. Moreover, within any given scenario the temperature drops with time, implying that a range of different S_n values define the *r*-process path. In the core collapse supernova scenario, the path is defined by 2 MeV < S_n < 4 MeV. Since S_n is given by the mass difference between adjacent isotopes, nuclear masses determine the location of the *r*-process path and thereby have the largest influence on predicted *r*-process abundances. Nuclei with closed neutron shells (*e.g.*, neutron number $N = 50$, 82, and 126) are particularly tightly bound. Hence they have large S_n values and small neutron-capture cross sections relative to the neighbouring isotopes. Accordingly, they are disproportionately represented among the waiting point nuclei and contribute substantially to the final abundances, being responsible for the *r*-process abundance peaks at A ~80, 130, and 195.

Even if the neutron separation energy of the *r*-process path nuclei were known precisely, the waiting points would be extremely neutron-rich nuclei about which very little is known, including masses. For this reason, calculations rely on global nuclear mass models whose parameters have been adjusted to reproduce the masses of nuclei that have been measured with a root mean square deviation around 700 keV. It is clear from comparisons of these different mass models that there is a degeneracy between the astrophysical conditions and the nuclear masses, *i.e.*, the same final abundances can be produced by different combinations of physical conditions and the hypothesized masses of unmeasured neutron-rich nuclei. The behaviour of the mass trends near the closed neutron shells, *e.g.*, $N = 82$, has the most profound influence on the final abundances. Systematic studies of the masses and low-lying excited states of neutron-rich nuclei must be performed to look for deviations from theoretical predictions. Even where the *r*-process path cannot quite be reached, it would still be very helpful to precisely measure the masses of neutron-rich nuclei as far out along an isotopic chain as possible, seeking surprises. It will likely never be possible to measure the masses of all the relevant nuclei. Therefore, the nuclear mass models that must be relied upon to extrapolate to neutron-rich nuclei beyond the reach of present experiments will continue to be crucial; they must be tested and refined using data near the closed neutron shells, particularly $N = 82$.

To date, the masses of only about 10 *r*-process progenitors have been measured, most only via rather imprecise β^- decay Q value (Q_β) determinations. With neutron-rich beams produced by the fission of uranium, TRIUMF will be

able to make important contributions to the understanding of the *r*-process through mass measurements. It will be possible to reach the *r*-process path in a number of places, but substantial coverage of the path near $N = 82$ represents the most exciting opportunity. The best option will be direct mass measurements using TITAN (TRIUMF Ion Trap for Atomic and Nuclear science). In some cases, the lifetimes of the nuclei will be too short (< 5 ms) to permit direct measurements of this kind. In these cases, other options are open such as production via a transfer reaction using a nearby neutron-rich beam followed by identification and isolation for Q_β study using EMMA (ElectroMagnetic Mass Analyzer) and TIGRESS (TRIUMF-ISAC Gamma-Ray Escape Suppressed Spectrometer). Yield calculations indicate that we will be able to reach some of the most important *r*-process waiting point nuclei whose masses have not yet been measured or confirmed, including ^{126,127,128}Pd, ^{129}Ag, ^{131,132}Cd, ^{131,132,133}In, ^{134,136}Sn, ^{137,139}Sb, and ^{138,140,142}Te.

In addition to strongly influencing the progenitor abundances, β^- decay lifetimes determine the timescale of the *r*-process, particularly at and near the closed neutron shells at $N = 50$ and 82. TRIUMF will make an impact in this area by carrying out β^- decay lifetime measurements using the 8π array when it is possible to produce and ionize the nuclei of interest before they decay. In cases where the lifetime is too short for this, EMMA can be used to study the β^- decays of nuclei produced in secondary reactions. In the very hot environments capable of generating the huge free neutron densities required for the *r*-process, nuclei with low-lying excited states are likely to be thermally excited. Hence it is not only the ground state β^- decay properties that must be known in order to predict the final abundances, but also those of the low-lying excited states. It is not possible, in general, to create isotopes in short-lived excited states in the production target and then transport them for study before they decay. It is possible, however, to populate the excited states of these nuclei using transfer reactions and Coulomb excitation. In some of these cases, it will be possible to use EMMA to isolate the isomeric recoils for decay studies, allowing the study of the β^- decay properties of the low-lying isomers. In other cases we will have to rely on systematic studies of these nuclei using reactions capable of probing their low-lying excited states and characterizing them. In this context, TIGRESS will be instrumental when combined with EMMA and SHARC (Silicon Highly-Segmented Array for Reactions and Coulex), particularly for the study of $M1$ transitions to constrain Gamow-Teller strength.

Beta-delayed neutron emission probabilities P_n affect the final abundances in the *r*-process by shifting the mass of a decaying nucleus by one mass unit and liberating neutrons at late times far from thermal equilibrium. This has the effect of smoothing out the odd-even staggering present in the progenitor abundances to some extent. However, in the scenarios with high entropy, freeze-out occurs very quickly, and the capture of neutrons after the (n,γ) – (γ,n) equilibrium is broken is not very significant. Moreover, measurements indicate that the P_n values of the relevant nuclei that have been studied are not very large. If these assessments hold true as more measurements are performed, then the importance of non-equilibrium neutron capture is not great. But if not, the neutrons liberated following these decays will quickly be captured again by other nuclei, again shifting the mass distribution. In this case, the neutron capture rates on these nuclei, which lie closer to stability than those in the *r*-process path, are likely to influence the final abundances. Although direct (n,γ) measurements are not presently feasible on these radioactive

nuclei, theoretical efforts to relate (d,p) and (n,γ) reaction cross sections have met with success and may allow a determination of some relevant bound state neutron capture cross sections using the powerful combination of TIGRESS, SHARC, and EMMA.

Experimental data on the β^- decay lifetimes and P_n values of *r*-process progenitors and daughters have been obtained for approximately 50 nuclei from ^{68}Fe to ^{140}Te. Since such experiments require lower beam intensities and can be performed with less pure beams than mass measurements, more progress has been made. Yet there are still a number of nuclei around the $N = 82$ shell closure for which lifetime and P_n values remain unmeasured. Some that will be within reach at TRIUMF include a number of nuclei in the Zr to Pd ($40 \leq Z \leq 46$) region. Among these, the most important ground state cases are ^{110}Zr and ^{128}Pd. While Zr is a highly refractory element that effectively resists ionization, its isotopes can be reached via proton transfer reactions with Y beams. Some of the nuclei with important low-lying isomers likely to be thermally populated in any reasonable *r*-process scenario that have not been definitively measured include ^{129}Ag, ^{131}In, and ^{127}Rh. Experiments with EMMA, SHARC, DESCANT (DEuterated SCintillator Array for Neutron Tagging), and TIGRESS will enable substantial progress on lifetime and P_n determinations.

An example of the type of precise study enabled by the powerful combination of these detectors and the pure, neutron-rich beams that will be available from photo-fission driven by the proposed electron linear accelerator is the study of the β-decay lifetimes and neutron emission probabilities of isomers in *r*-process progenitors around $N = 82$. The study of the decay properties of these isomers is rendered extremely difficult when the lifetimes of the isomer and the ground state radioactivity are comparable, as is often the case in this region. This situation implies that the contributions of the two states cannot be disentangled in the decay curves. However, by populating and identifying the isomeric state in a transfer reaction using a heavy beam in inverse kinematics, the recoiling isomer can be uniquely identified and its β-decay lifetime and β-delayed neutron emission probability measured, *e.g.*, the 300 keV isomer in ^{131}In could be studied effectively in this way. By carrying out a (p,d) reaction to populate the isomeric state using a ^{132}In beam, which is predicted to be very intense and pure, the deuterons could be detected with SHARC and used to tag the excitation energy of the ^{131}In recoil. The recoils themselves would be separated from the beam electromagnetically and isolated for β-decay study in the focal plane of EMMA. DESCANT would be used to ascertain the neutron emission probability following β decay. In this way one can achieve very precise and selective lifetime and branching ratio data.

The fission of heavy nuclei is important in some *r*-process models. In these scenarios, fission barriers and yields have a large influence on the final abundances. Calculations typically assume that all nuclei with $A > 256$ are produced in the *r*-process fission. Since the extremely heavy neutron-rich nuclei whose fission may terminate the *r*-process are unlikely to be produced in any laboratory anytime soon, systematic studies of fission are needed to improve theoretical models of fission in these unknown nuclei. TRIUMF can contribute in this area by carrying out systematic studies with lighter neutron-rich nuclei. Similarly, it will be difficult to produce the nuclei with $N = 126$ that are the progenitors of the third *r*-process peak around mass 195 in large numbers. Nevertheless, it may be possible to produce nuclei in this region in

sufficient numbers to study their β-decays via the deep inelastic scattering of heavy, neutron-rich beams such as ^{132}Sn.

The Nuclear Physics of Neutron Stars

Neutron stars are the end states of massive stars. They are extremely exotic objects in that they are macroscopic, with radii of roughly 10 km, yet they have an average mass density almost as large as that of an atomic nucleus. Models indicate that the crusts of neutron stars exhibit a transition starting with stable nuclei at the surface, down through neutron-rich nuclei at high pressure and density, then moving towards the core through exotic phases of nuclear matter. Astronomers are now able to study the thermal emissions from neutron star crusts and infer their properties. Further, the crust plays an important role in Type I X-ray bursts, which are thermonuclear explosions arising from the accretion of matter onto the surface of a neutron star from a stellar companion in an interacting binary star system. The recently discovered X-ray superbursts, which are many times more luminous and longer lasting than ordinary X-ray bursts, are still poorly understood. To determine if superbursts have a thermonuclear origin, the thermal properties of the crust must be better known. To understand the neutron star crust, we need to understand neutron-rich nuclei and the nuclear equation of state at large neutron excess. The latter is significant in understanding the transition to new phases of nuclear matter as well as determining the neutron star mass-radius relation, and can be understood only through systematic studies of the structure and excitations of neutron-rich nuclei.

Recent calculations have explored the nuclear processes that take place in the crusts of neutron stars accreting material and undergoing X-ray bursts [S. Gupta *et. al.*, Ap. J. 662, 1188 (2007) and P. Haensel and J. L. Zdunik, Astron. Astro. 480, 459 (2008)]. As the ashes of an X-ray burst sink into the crust, being buried by more accreted material, electron captures drive the nuclei to a very large neutron/proton ratio. Once the nuclei reach the neutron drip line, they emit neutrons before undergoing further electron captures as the pressure and density increase. Finally, pycnonuclear fusion occurs as the nuclei approach depths at which the density is nearly nuclear. Both the electron captures and the pynonuclear fusion reactions heat the neutron star crust, affecting model predictions of astronomical observables such as the recurrence time of superbursts and the cooling of the crusts of the variably accreting neutron stars responsible for X-ray transients.

Only by improving our knowledge of the nuclear physics of neutron-rich nuclei will we be able to reliably describe the relevant electron capture Q values and properly interpret the astrophysical meaning of superburst and X-ray transient cooling observations. The nuclear data needs to include the masses and the properties of the low-lying excited states fed by the electron captures of neutron-rich nuclei with $20 < A < 160$, including Gamow-Teller matrix elements. Unfortunately, there are no substitutes for systematic studies as thousands of nuclei are involved. However, a large fraction of the ashes of X-ray bursts are predicted to be in the form of ^{104}Cd. So targeted studies of the electron capture products of these *rp*-process ash nuclei such as ^{104}Y and ^{104}Sr using TITAN would be particularly germane. The other experimental facilities

at ISAC, including 8π, SHARC, TIGRESS, and EMMA, will allow β-decay and reaction spectroscopy of these neutron-rich nuclei that can't be done elsewhere. Finally, the nuclear symmetry energy dominates the baryonic contribution to the pressure of a neutron star, determining the mass-radius relation, the moment of inertia, and the thickness of the inner crust. The density dependence of the nuclear symmetry energy will be probed by comparing collisions of neutron-rich nuclei on a given target with those of neutron-deficient nuclei using the HÉRACLES facility at ISAC.

6.2.1.1.4

Fundamental Symmetries with Exotic Nuclei

Introduction

One of the great challenges in science is to explain the amount of matter we see around us. Evidence for some kind of Big Bang is overwhelming, but any cosmological model using the physics that we presently know produces a photon-to-baryon ratio much higher than the billion-to-one ratio observed. To correct the discrepancy requires processes that create a larger matter-to-antimatter asymmetry. The discovery and subsequent measurement of electric dipole moments (EDMs) potentially provides an experimental tool to constrain theoretical models that address this issue.

The world around us is governed by a series of fundamental laws and symmetries. The standard model has provided a precise framework for calculation and prediction, the results of which agree with experimental data remarkably well. Many extensions to the standard model have been proposed. TRIUMF has a long history of performing high-precision experiments that both test the standard model of particles and forces and look for physics beyond it. In recent years, this testing has centred on different aspects of the charged weak current as measured in the first generation of particles in nuclear beta decay. This program, centred on the TRIUMF Neutral Atom Trap (TRINAT), proposes to

continue the pursuit of its objective of constraining physics beyond the standard model via measurements of right-handed currents, scalar bosons, and exotic massive particles.

To complement this existing program, as well as take advantage of TRIUMF's unique capabilities two new independent projects will probe time-reversal symmetries via a direct measurement. The first is a project to measure the permanent EDM in heavy, octupole deformed Rn nuclei and the second project is to measure parity non-conservation effects, both atomic and nuclear in the chain of Fr nuclei. A brief outline of these programs is discussed below.

New Programs at TRIUMF Utilizing High *Z* Atoms

In general, as the nuclear charge increases, the atomic electrons' overlap with the nucleus also increases. This overlap greatly increases the sensitivity of high *Z* atoms to short-ranged quark-lepton interactions. As an example, the magnitude of atomic parity-violating effects scale as Z^2N before relativistic effects are considered and nuclear anapole moments scale as $Z^{8/3}A^{2/3}$. To make full use of this enhancement, high-precision atomic physics techniques have to be combined with state-of-the-art nuclear detection methods as well as the world's most intense rare-isotope beams. These capabilities all come together at the ISAC-I facility where two new collaborations will utilize the unique capabilities of the facility.

Time-Reversal Violation

An electric dipole moment (EDM) changes sign under both parity and time reversal and, for an elementary particle, atom, or molecule, can only arise from polarization of the system by T- or, equivalently, CP- violating interactions. Measurement of a non-zero particle EDM would represent the detection of a new form of CP violation, distinct from the flavour-changing CP violation studied to date in the decays of neutral *K* and *B* mesons. This latter CP violation appears to be well described within the minimal electroweak standard model by a complex phase in the Cabibbo-Kobayashi-Maskawa (CKM)

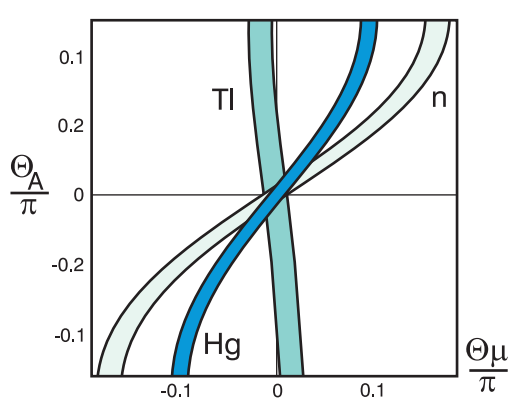

Figure 1: Example of complementarity of three EDM measurements in setting limits on two CP-violating parameters in a SUSY model.

quark-mixing matrix. However, it cannot account for the observed baryon asymmetry of the universe, strongly suggesting additional sources of CP violation. This additional CP violation is likely non-flavour-changing and could induce significant particle EDMs.

While the standard model predictions for particle EDMs are many orders of magnitude below current experimental sensitivity, virtually all extensions to the standard model, (*e.g,*. multiple-Higgs theories, left-right symmetry, and supersymmetry) generically predict EDMs within, or tantalizingly close to, the reach of current experimental techniques. The present limits on EDMs are given in Table 1. These have already ruled out significant portions of the parameter spaces of many models (see Figure 1 for an example). However, a substantial improvement on current limits would have profound implications for the spectrum of viable extensions to the standard model. The aim of this experimental program is to achieve such an improvement through the ability to select systems with enhanced sensitivity to underlying CP-odd physics. In particular, the work will focus on searching for atomic EDMs of certain radon isotopes where the large predicted enhancements stem from collective nuclear octupole deformation.

Parameter	Limits from		
	^{199}Hg	Neutron	Electron
θ_{QCD}	1.5×10^{-10}	4.1×10^{-10}	-
Down quark EDM	-	5×10^{-26} e-cm	-
Colour EDM	3×10^{-26} e-cm	-	-
ε_q^{SUSY}	2×10^{-3}	5×10^{-3}	-
ε_q^{Higgs}	$0.4/\tan\beta$	-	$0.3/\tan\beta$
χ^{LR}	1×10^{-3}	5×10^{-8}	-
C_T	1×10^{-8}	-	5×10^{-7}
C_S	3×10^{-7}	-	2×10^{-7}

Table 1: Limits on CP-violating parameters [Baker *et al.*, Phys. Rev. Lett. 97, 131801 (2006); Romalis *et al.*, Phys. Rev. Lett. 86 2505 (2001); Regan *et al.*, Phys. Rev. Lett. 88 71805 (2002); Cho *et al.*, Phys. Rev. Lett. 63 2559 (1989); from Pospelov and Ritz, *Ann. of Phys.*, 2005].

The presence, or absence, of octupole deformation in the odd-*A* Rn isotopes of interest, namely $^{219,221,223,225}Rn$, will be investigated by implanting beams of the Astatine isobars from ISAC-I at the centre of the 8π spectrometer. High-efficiency β, γ, X-ray conversion electron coincidence data will be acquired following the β-decay of these At isotopes and will be used to construct the decay schemes of the Rn daughters. These measurements aim to establish the energy splitting of the parity doublet states predicted to accompany octupole deformation, a key parameter in the enhancement of the atomic EDMs, and one that is unknown in all of the previously mentioned Rn isotopes. In addition to the nuclear structure interest of achieving a better understanding of octupole

deformation in this mass region, these measurements will identify the best candidates for EDM searches at ISAC-I.

We propose to perform the experiment by a measurement of the free procession rate of a sample of polarized Rn atoms suspended within a well-defined magnetic and electric field environment. If an atom has electric and magnetic dipole moments, d and μ respectively, then its interaction with externally applied electric and magnetic fields will result in the Hamiltonian:

$$H = \vec{J}.(\mu\vec{B} + d\vec{E})$$

resulting in a precession frequency of:

$$\dot{h}/\omega = 2(\mu B \pm dE)$$

where the arises from the electric field being either parallel or anti-parallel to the direction of the magnetic field. Therefore, a comparison of the change in the observed precession frequency when the electric field is reversed will result in a direct measurement of the atomic EDM.

The precession rate will be observed by utilizing the angular distribution of γ-rays emitted by the decaying Rn nuclei using a ring of high purity germanium detectors from either TIGRESS (TRIUMF-ISAC Gamma-Ray Escape Suppressed Spectrometer) or GRIFFIN (Gamma-Ray Infrastructure for Fundamental Investigations of Nuclei) (see Figures 2 and 3).

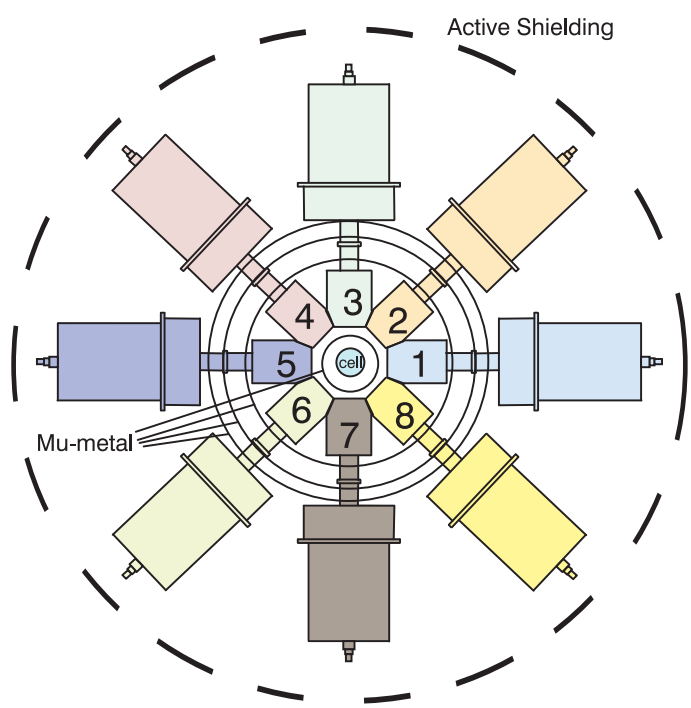

Figure 2: A schematic of the experimental set-up for the Rn EDM experiment.

Systematic effects will be considered by the introduction of a co-magnetometer, which is an isotope with known magnetic moment, μ, and predicted negligible EDM alongside the Rn isotope of interest.

Parity Non-Conservation

The study of weak interactions between individual nucleons allows us to extract unique information about the short-ranged interactions that exist within the nuclear medium. We propose to bring together expertise from nuclear structure, weak interactions, and atomic physics to study a parity-violating electromagnetic nuclear moment to gain conclusive information on how these nucleon-nucleon interactions change within nuclear matter. The main source of parity violation within atomic transitions arises from the exchange of weak neutral currents between the electrons and nucleons. These interactions can be grouped within the Hamiltonian into those that have nuclear spin dependence and those that do not. In general, the nuclear spin independent terms will dominate; however, for the studies proposed at ISAC using transitions between the hyperfine levels of the atomic ground state of francium, the heaviest of the alkali elements, these nuclear spin independent terms vanish. The vanishing of the spin independent term gives a unique handle on the spin dependent interactions.

Bohr-Weiskopf Effect

As the weak neutral charge arises mostly from the neutrons, it is important to have an independent test of the neutron distribution along the chain of isotopes of interest. One of the approximations often used in atomic spectroscopy is that the electron wave functions are constant across the full extent of the nucleus. While true for almost all nuclei, this approximation breaks down

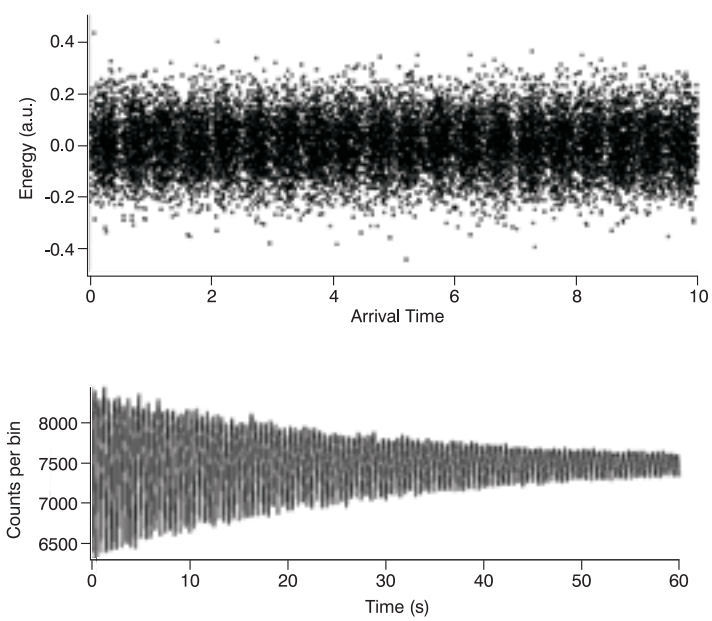

Figure 3: Simulated, time correlated signal from a single detector.

when the heavier nuclei are observed. In 1950, Niels Bohr and Victor Weiskopf showed that the extended nuclear magnetization has observable consequences on atomic spectra as the hyperfine structure is modified. This modification arises from an electron creating a non-uniform magnetic field over the region of the nucleus, providing an interaction dependent not only upon the size of the nuclear magnetization but also on its distribution.

Detailed measurements of the Bohr-Weiskopf effect usually require knowledge of both the hyperfine structure constants and magnetic moments of the given nucleus. High-precision measurements of the hyperfine structure of two states with different radial distributions across the nucleus can give information about the hyperfine anomaly. This anomaly was first investigated at Stony Brook by combining precision measurements of the $7P_{1/2}$ hyperfine splitting performed in house with $7S_{1/2}$ splittings carried out previously at CERN's ISOLDE for the chain of isotopes from ^{208}Fr to ^{212}Fr. The results are sensitive to the spatial wave function of the valence neutron in the odd-*N* francium isotopes. The splittings will be measured along the entire available chain at ISAC-I.

Nuclear Anapole Moments

We propose to start this program of study by measuring the nuclear anapole (*not a pole*) moment along a series of francium isotopes. The nuclear anapole moment is a parity-violating, time-reversal, conserving electromagnetic moment first postulated by Zel'dovich in 1957. The moment arises from the weak nucleon-nucleon interactions and is the result of the chirality acquired by

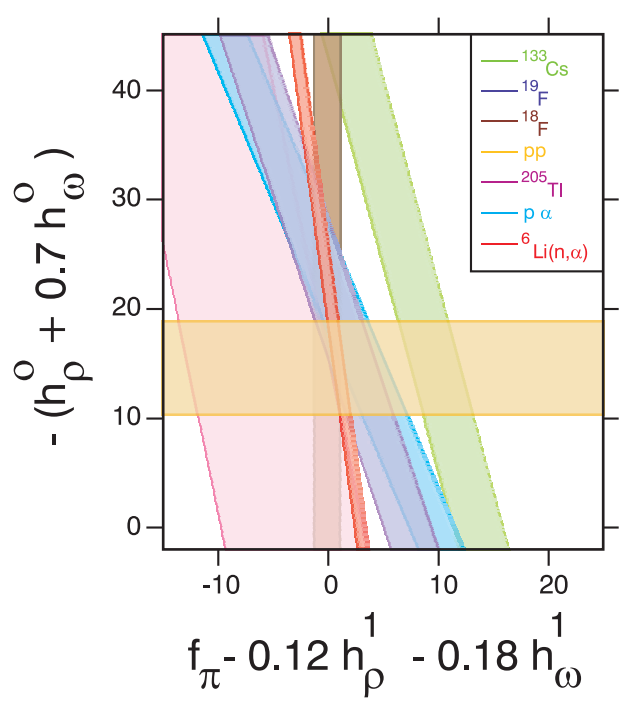

Figure 4: One standard deviation constraints on isovector and isoscalar weak *N-N* couplings from measurement. As can be seen, the Cs measurement is hard to reconcile with other experiments.

the nuclear current. This moment can naïvely be viewed as a dipole moment and a toroidal current that generates a magnetic field only within its interior.

Anapole moments can arise from a number of different effects; however, recent calculations by Haxton *et al* suggest that it is dominated by nuclear core polarization caused by valence nucleons [W.C. Haxton and C.E. Wieman, Ann. Rev. Nucl. Part. Sci. 51, 261 (2001)]. If this is the case, then a systematic measurement of the anapole moments along a chain of isotopes would result in an odd-even effect dominated by the single unpaired neutron which would, in turn, allow for studying the modification of the *N-N* interaction parity-violating interaction in the nuclear medium. The current constraints on the isovector and isoscalar weak *N-N* coupling are given in Figure 4.

To study the nuclear anapole moment along the chain of francium isotopes, its interaction with the atomic electrons will be probed. An *E*1 transition between hyperfine levels is parity forbidden; however, this restriction can be relaxed by anapole-induced mixing of states with opposite parity. The general approach is then to measure the strength of this anapole-induced mixing. Many atoms will be initially trapped and cooled in a magneto-optical trap before being transferred to and held in the centre of a microwave Fabry-Pérot cavity by a blue, detuned dipole-force trap. These state-of-the art techniques would allow for the cloud of atoms to be precisely held within a node of the magnetic microwave field (an anti-node of the electric field) while being within a static magnetic field and a Raman field generated by a pair of intersecting laser beams (see Figure 5). This will ensure that the microwave field will only drive *E*1 transitions. The atoms will all start in the lower ground-state

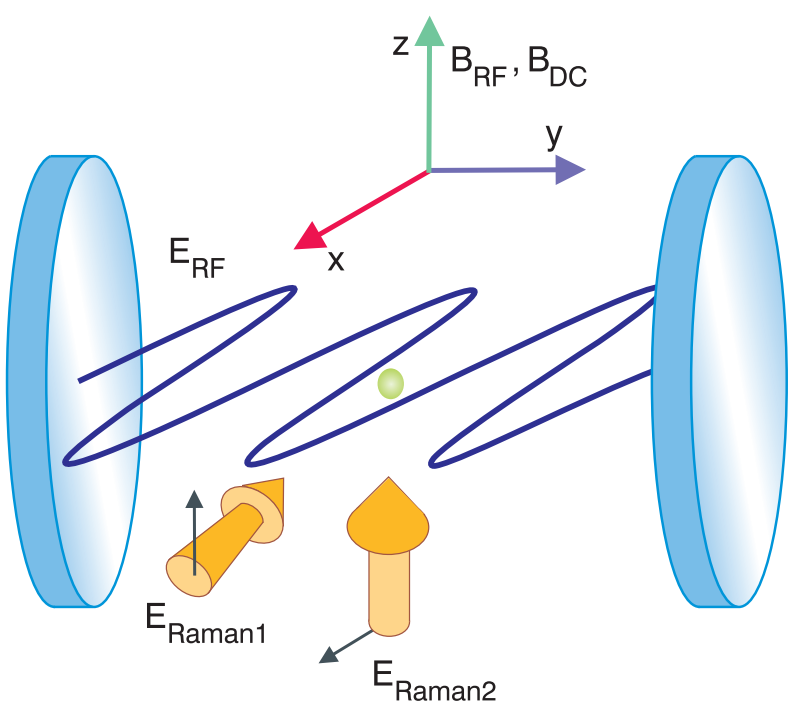

Figure 5: Schematic of the proposed set-up for measurement of the anapole moment of francium atoms. From Gomez *et al.* Phys. Rev. A75 033418 (2007) .

hyperfine level while the observed signal will be proportional to the population of the upper state probing the strength of the induced transition.

Atomic Parity Non-Conservation

Atomic parity violation measures the strength of the weak neutral current at very low momentum transfer. Within the atom, the weak interaction is dominated by the weak charge of the neutron, as the proton weak charge is significantly smaller due to an accidental cancellation of terms. Atomic parity non-conservation results in Cs are therefore naturally complementary to parity-violating electron-electron and electron-proton scattering experiments at the Standard Linear Accelerator Center and the Thomas Jefferson National Accelerator Facility. The contribution of the weak charge is not consistent across all standard model extensions; however, its measurement will provide a benchmark for other possible departures of other low-energy standard model observables because it is almost insensitive to corrections of one-loop order from all SUSY particles.

The weak interaction induces a mixing of atomic states with different parities. The mixing allows transitions that would otherwise be forbidden to occur because the mixings, and therefore transition strengths, are generally very weak. They are most readily viewed as an interference with a stronger, allowed transition. A typical observable can be represented as:

$$\left|A_{PC} + A_{PNC}\right|^2 = \left|A_{PNC}\right|^2 + 2\mathrm{Re}\left(A_{PC} A^*_{PNC}\right) + \left|A_{PNC}\right|^2,$$

where A_{PC} and A_{PNC} are the parity conserving and parity non-conserving amplitudes, respectively. In general, the $|A_{PC}|^2$ term of negligible magnitude can safely be ignored whereas $2\mathrm{Re}(A_{PC}A^*_{PNC})$ is the interference term that

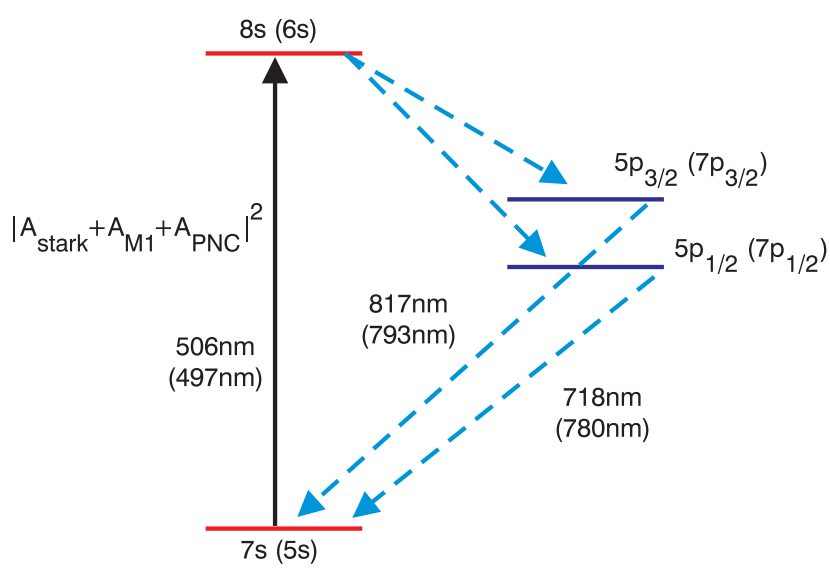

Figure 6: The relevant atomic levels and associated transition wavelengths of Fr (Rb) for an atomic parity non-conservation experiment at TRIUMF.

can be experimentally isolated as it changes sign under a parity transformation.

To date there has not been an atomic parity non-conservation measurement carried out in neutral atoms utilizing the relatively new technologies of laser cooling and trapping of high Z, radioactive species. We will work towards this measurement in Fr, first by developing techniques that measure the $M1$ strength in Rb for the analogous transition (see Figure 6), then later by measuring a highly forbidden transition rate in Fr, where the high Z gives a significant enhancement. This procedure follows one of the two main strategies outlined in the recent review [Bouchiat *et al.*, Eur. Phys. J. D15, 5 (2001)]. The transition of interest is the ground state to first excited *s*-state in atomic Fr (see Figure 6). Here, the application of a large electric field will result in interference between the parity non-conserving amplitude and the Stark effect that is proportional to the weak charge.

A collaboration is mounting an experiment at the Lawrence Berkeley Laboratory using a caesium atomic fountain that could eventually improve electron EDM searches by two orders of magnitude. Through a TRIUMF letter-of-intent, the collaboration has declared that if successful in caesium, it will mount an experiment at ISAC-I to improve further the sensitivity by an additional factor of nine by using francium atoms.

Summary

TRIUMF has a tradition of careful, high-precision measurements that require extended periods of gathering data. The above program would extend this tradition into the weak neutral sector via a series of complementary experiments focused on stringent tests of physics both within and beyond the standard model.

6.2.1.2

Major New Initiatives

6.2.1.2.1

Cyclotron Refurbishing and Specialized Actinide Beam Line

Introduction

Space charge forces limit the maximum intensity available from the TRIUMF cyclotron to approximately 500 μA. In 1988, and again in 2003, peak currents of 420 μA were demonstrated in pulsed mode to reduce the average current to 200 μA. Proton beam dump capacity and development time limited testing to achieve slightly less that 300 μA of average proton current extracted from the cyclotron for a few hours. Significant in this result is that the cyclotron operating temperatures and internal beam spills (to minimize activation) scaled well with the increase in circulating current indicating good beam quality through the injection and accelerating systems.

The development program in conjunction with the refurbishing program has made significant progress increasing the cyclotron output over the past ten

years. The increase in output current has not had a negative impact on the beam quality or the serviceability of the machine. At present, 220–245 μA is accelerated and routinely extracted.

The 300 μA upgrade will address the need to deliver higher operational intensities of quality beam reliably and provide the groundwork to allow subsequent upgrades towards the 500 μA ultimate intensity. This upgrade is compatible with the anticipated construction of BL4N, which is part of the TRIUMF ten-year vision.

Key components to achieving higher operating currents include: higher intensity beam that will maintain or improve on the existing characteristics of good quality, reproducibility, and reliability. While beam stability for the three existing beam lines is acceptable, the additional operation of the new proton beam line, BL4N, will require further stability improvements. Lastly, higher operating currents cannot significantly add to activation that impacts serviceability.

Beam Intensity, Quality, Reproducibility, Reliability, and Serviceability

Approximately 300 μA average current has been successfully demonstrated under development conditions that optimize all systems parameters. Operationally, these optimal conditions are not necessarily easily or quickly reproducible. Over time, better tunes have been developed to make routine operations at increased currents easier to achieve. Additional beam dump capacity would allow this process to continue as well as provide the ability to ascertain and test improvements. From experience, we know that higher currents can cause heating in the central region and induce inflector sparking. We have successfully dealt with the heating problem in the past, so believe that there are no insurmountable problems in this regard.

The spiral inflector, which consists of two uncooled insulated electrodes, directs the H^- ion beam from a vertical trajectory into the horizontal plane of the cyclotron. Typically, beam is skimmed at the entrance to the inflector with losses less than 1 W. Though the nominal ion-source emittance is small enough to fit through the inflector system easily, the energy spread halo increases with increased injected current. This increase is because the injected beam needs to be increasingly bunched with increasing intensity. Because the inflector is highly dispersive, the energy spread halo leads to beam losses in the centre region.

While ~300 μA operation has been demonstrated, it is difficult to project whether operating in the present configuration routinely at 400 μA will or will not damage the inflector. A spare is being built to provide the contingency that will allow for further development. To move to higher currents, a fundamental design change is proposed, although it would not preclude the use of a third buncher in the injection line for 1 mA bunched beam. This proposal incorporates existing TRIUMF ion source technology to produce 5 mA H^- ion beam with a no- or weak-bunching regime. The anticipated injected current is 5 mA to achieve an extracted current of 450 μA. This option has not been explored with the present injection line because the ion source is only capable of 1 mA.

Naturally, the effective emittance is larger at higher current, but the injection element aperture sizes are sufficient: 0.3 μm normalized emittance is 12 μm at 300 keV. The maximum beam diameter, which is defined here as 4 times the rms size, is 9.2 mm at 0 mA rising to 11 mm at 5 mA. The periodic section transport has 90° phase advance per cell at zero current, but is depressed to 55° at 5 mA. However, the injection line quadrupoles have an aperture of 51 mm with aperture clamps ("skimmers") of 38 mm; these are more than adequate to handle the increased beam sizes at 5 mA.

The ion source and injection are very reliable and reproducible for the present beam production of approximately 225 μA. To achieve higher extracted currents, the cooled variable slits are opened, and tuning is required in both the injection line and the cyclotron. This process is reproducible but challenging. Required upgrades to deliver high quality, high intensity beam are:

- High current TRIUMF cusp ion source;
- Vacuum upgrade to ~3×10^{-8} torr to keep stripped beam below the 5 μA level;
- The 300 kV power supply and other electrostatic power supplies will need to be upgraded for higher current;
- Slits, beam stops, and cooled apertures will need to be installed in the injection line to have the potential to absorb the 1.5 kW injected beam power; and
- The vertical injection line upgrades scheduled for 2009 must be compatible with either the bunched or unbunched modes.

Optimal H^- production from the present ion source is not achievable due to physical space constraints. The high output source will be located in the existing third ion source terminal in the next year or two. Beam quality is expected to improve in either the unbunched or bunched mode with the high-output cusp source. In the bunched mode, cooled variable aperture slits are used to define the emittance of the beam transported to the cyclotron. As the high current ion source is brighter than the existing source, more quality beam will be available within the acceptance of the cyclotron. In the unbunched mode, ion source instabilities will not be amplified by the bunchers, and phase control is simplified. Better injected beam quality translates directly to less average spills in the cyclotron thereby preserving serviceability (activation) and is further discussed in Section 4.2.4.

The first turn in the cyclotron needs to absorb about 1.5 kW, so cooled apertures will be required. Intuitively, the expectation is that beam coming out of the inflector and traversing the first acceleration gap would be "messier" at this high current but, because of the zero-energy spread, it will be cleaner and more easily collimated. A water-cooled beam absorber was installed at the centre post a few years ago. This, in combination with the existing radial flags and the use of the existing ion source to inject 500 μA unbunched beam, will allow us to make measurements to ascertain the losses and extrapolate cooling requirements.

The vertical focusing limit at the cyclotron centre is approximately 100 μA per 10° of phase acceptance. To gain the required phase acceptance, the radio-frequency (RF) voltage will be raised by about 10–15%. In late 2007, the RF

voltage was successfully raised by 10% for test purposes. This, and the increased required RF power needed to routinely accelerate higher currents, requires approximately 40% more RF power, which is well within the range of the existing system with a few minor engineering upgrades.

Beam losses must be significantly reduced if machine serviceability is to be maintained during the high-intensity upgrade. This objective can be achieved by reducing the extraction energy for major proton-beam users from 500 to 475 MeV. Electromagnetic stripping of the electrons is the dominating beam-loss mechanism at energies above 450 MeV. Thus, limiting the extraction energy at 475 MeV would reduce the losses by about 50% compared to a 500 MeV extraction energy.

Stability

A huge advantage of an H^- cyclotron is that the extracted beam is not sensitive to the RF voltage. A stripper foil at fixed radius always sees the same beam energy; if the RF voltage fluctuates (increases/decreases), it simply takes more/less time for particles to reach this radius. For this reason, TRIUMF has not had or needed the RF voltage stability to be better than a few parts in 10^{-3}.

This stability criteria changes if there is more than one extracted beam at energies above 430 MeV. Operating BL1A and BL2A at comparable extracted current requires BL2A to "catch" a sliver of the circulating distribution that is only about 1 mm wide. The beam on BL2A (ISAC-I) target is required to be stable to 1% for steady RIB production; this requires the width of this sliver to be stable to the level of 10 μm. The radius gain per turn is small compared with the betatron turn width so, if the cyclotron conditions are ideal, such a tiny width is not a problem because the radial density is uniform in the outer portion of the cyclotron. However, the cyclotron traverses the $\nu_r = 3/2$ resonance at 430 MeV which causes the circulating beam to become mismatched. This mismatch precesses as ν_r departs from 3/2 causing radial density modulations, which create fluctuations in BL1A/BL2A extracted current ratio as the RF voltage fluctuates.

Presently the ion source pulser is used in a feed back loop to maintain the stability of the BL2A beam, albeit at the expense of the other on-line beam lines. The problem will become more complicated with three simultaneously extracted high-energy beams (BL1A, BL2A, and BL4N). There are two relatively straightforward solutions: stabilize RF voltage to better than 10^{-4}, or correct the 3/2 resonance.

Experiments have shown that this resonance can be either exacerbated or reduced using existing "harmonic coils" mounted on the cyclotron vacuum tank lid [R. Baartman *et al.*, Proc. Int. Conf. on Cyclotrons and their Applications (1984) p.40]. These coils are in 6 azimuthal segments and generate a first harmonic, so the third harmonic cancellation is not exact. Orthogonal pairs of coils may be contemplated to provide phase correction if necessary.

Specialized Actinide Beam Line

A number of lessons have been learned from building and operating the beam line (BL2A) that supplies protons to the current ISAC-I target:

- The matrix used to describe the beam exiting the cyclotron was incorrect in the vertical direction.

- Most of the BL2A tuning time is devoted to handling the few ηA that are in the beam halo to avoid tripping the spill monitors.
- An achromatic design would have facilitated tuning, especially when switching from one target to another.

A beam line has been designed (see http://lin12.triumf.ca/text/2008-AAC/beamline4n-071122.doc) to address all three of the above points. This line is achromatic, includes a collimator in the cyclotron vault section, and uses the new extraction matrix.

Most of the beam halo comes from large angle scattering at the stripper foil. Traditionally, foils of 5 mg/cm^2 thickness have been used. In 2007, foils in the 2–3 mg/cm^2 range were successfully run in routine operation. GEANT4 calculations confirm that there is sufficient scattering from such thick foils to exceed the "hands-on maintenance" level of 1 ηA/m that is used as a trip level. Further foil calculations, which include the fraction of neutrals coming from a too-thin foil, find an optimum thickness of 800 μg/cm^2. The existing BL1A and BL2A stripper cassettes are not designed to handle such thin foils, but the new BL4N stripper will. A recent simulation of the stripping foil indicates that the foil temperature is lower with a thinner foil. Experiments to test this finding and to establish a baseline μAh lifetime are planned during the 2008 running period. The thinner foils are expected to reduce total spills by a factor of 2.5. New stripper cassettes designed to handle thin foils will be installed on BL1A and BL2A as part of the 300 μA upgrade. BL4N will be capable of transporting 200 μA of proton beam and will be equipped with a beam dump to provide flexibility for cyclotron tuning and tests during the high-intensity upgrade.

Conclusion

Significant development results and operational experience provide confidence that the proposed upgrades to the injection system, RF systems, and stripper foils will culminate in routine extraction of 300 μA from the cyclotron with no serviceability issues. These upgrades are required for, and compatible with, possible future upgrades to 400 μA.

6.2.1.2.2

Electron Linear Accelerator: e-linac

TRIUMF proposes to build an electron accelerator at the TRIUMF laboratory. The accelerator will significantly advance national capabilities in science and technology, while fostering new international partnerships. Fundamental science, such as the study of how the chemical elements in the Universe were made, as well as applied science, such as the technique of β-NMR for detailed investigations of the magnetism in materials, will benefit from this facility. Through this project, the technology of superconducting acceleration, an emerging global industry, will be developed in Canada. This technology opens a new avenue for the production of medical isotopes and will form the basis for next generation light sources that are used for materials and biomolecular research. International partners from India and Japan wish to participate in the construction of this facility and the knowledge gained will allow Canada to participate in future international facilities such as the CERN SPL, the European Spallation Source, and the International Linear Collider.

Motivation

The TRIUMF electron linear accelerator (e-linac) proposal represents a unique opportunity in the history of TRIUMF: an ostensibly internal infrastructure project that furthers both the internal and external physics programs

in almost equal measure. In addition, it brings the benefit of introducing new technology to Canada and the vehicle for transferring it to an industrial partner.

Introduction

This section describes a megawatt-class electron linear accelerator (e-linac) proposed as a driver for γ-ray induced fissioning (photo-fission) of actinide targets with rates up to 10^{13} to 10^{14} fissions/sec depending on nuclide species. The particular emphasis would be on neutron-rich isotopes for nuclear structure physics, and ^{9}Be(γ,*p*)^{8}Li production for β-NMR studies of material properties. The e-linac will also benefit users of proton-rich isotopes (*e.g.*, nuclear-astrophysics) by reducing the competition for proton beams at the existing, and planned, ISAC facilities.

The 50 MeV, 10 mA, continuous wave linac (CW-linac) is based on existing superconducting radio-frequency (SRF) technology in the GHz range. Though high-power and/or high-current e-linacs are a mature technology proposed elsewhere for applications ranging from coherent light-sources (at a few tens or hundreds MeV) to linear colliders for exploration of fundamental particle physics at the TeV scale, TRIUMF is the vanguard[1] for applying this technology to the copious production of rare-isotope beams (RIBs).

This proposal calls for a factor of ten increase of power handling at the targets, compared with the best that is presently available at ISAC and a commensurate rise in neutron-rich nuclide production rates. This increase will give complementarity with the proton-rich nuclei produced with 500 MeV protons extracted from the TRIUMF cyclotron 4-north beam line (BL4N). This proposal also calls for radio-frequency (RF) power handling per accelerating cavity near the present technological limits of SRF CW-linacs. With these choices, the proposed electron driver and its photo-fission based actinide target station represent a major infrastructure initiative that will be a major contributor to maintaining the pre-eminence of Canadian nuclear physics programs for at least a decade.

Relationship to Broader Canadian Research Community

E-linac will draw upon TRIUMF's existing capability to design and operate 100 MHz, 4K and $\beta = v/c \ll 1$ SRF systems and expand the expertise to 1 GHz, 2 K and $\beta = 1$. As a result, TRIUMF will become a unique multi-regime centre for SRF science and accelerator physics. The Canadian university-research program has its sights set firmly on the Large Hadron Collider (LHC) and its upgrade path, the SPL and PS2 and on precision Higgs physics at the International Linear Collider (ILC). Both the CERN superconducting proton linac (SPL) and ILC rely on SRF accelerating structures, at 0.7 and 1.3 GHz respectively, and infrastructure for e-linac could facilitate Canadian contributions to either of these high-energy physics frontier projects.

The proposed linac has much in common with the SRF technology proposed for the ILC and could act as a springboard for commercialization of this technology in Canada. Whatever the precise fortunes of ILC, GHz SRF technology is here to stay. The linac also has features in common with designs for ERL

1 The abandoned electron linac proposal for SPIRAL-II at GANIL was for a mere 25 kW beam power.

drivers of free electron lasers (FELs) that are used for studies in condensed matter physics, materials science and biochemistry. TRIUMF's e-linac infrastructure could be expanded to serve those needs.

Diversification: Next Generation Light Sources

Electron linacs are in operation or proposed around the world as drivers for so-called fourth generation synchrotron light sources.[2]

Future reconfiguration of e-linac as a recirculating linear accelerator (RLA) or energy recovery linac (ERL) opens the door to such a possibility. A shortcut to high-energy X-rays is proposed via Compton scattering (CS) of optical photons off hundreds of MeV electrons. CS sources have applications in materials science and medical imaging where the high 6D brilliance and easy tuning of photon energy out-compete synchrotron light sources. E-linac could serve as a testbed for the enabling technologies of a CS source at the Canadian Light Source (CLS). At the other end of the light spectrum, the infrared FELs can provide capabilities that make them competitive with laser-based sources. They are easily tunable by adjusting the undulator field, and their range extends down to terahertz. In addition, their enormous photon power makes possible near-field imaging with resolution considerably below the diffraction limit.

These properties alone provide excellent tools for structural analysis. When combined with conventional laser sources and in-pump probe experiments, they will give the means to understand how these structures function in systems as diverse as cell organelles and quantum dots. Although the expansion path to a CS Source or IR-FEL is not costed in the e-linac baseline, we have gone to some pains to assure that e-linac is inclusive of future options: no part of the e-linac design will preclude such a future expansion.

Broader Impacts

E-linac will transform Canada from a purchaser of SRF technology to a nation with the capability to construct, process and sell niobium cavities and their attendant components. Presently, there are only a few vendors of SRF technology. Through collaboration with a BC-based engineering company, e-linac will enable Canadian industry to join this elite group. The e-linac project will provide many opportunities for the training of highly qualified personnel, particularly in the fields of cryogenic and radio-frequency engineering and accelerator science, including particle beam and electromagnetic field modeling; etc. Research and development (R&D) for e-linac may also have direct impacts on the disciplines of accelerator engineering; *e.g.*, megawatt (MW)-regime facilities will all benefit from improved input coupler design.

Facility Overview

The photo-fission source has two major components: a 0.5 MW e-linac, to be housed in the existing Proton Hall and a 0.5 MW-capable target station, to be located in the western extension of the ISAC Target Hall, connected by a 60 m long electron beam line that parallels the proton beam line 4 north (BL4N).

2 JLab IR FEL & UV FEL, Cornell ERL, Daresbury ERLP & 4GLS, ARC-EN-CIEL at Soleil, BINP (Novosibirsk) THz FEL, JAERI ERL-FEL, PKU-ERL-FEL, KAERI EAF, BESSY-FEL, etc.

The target concept is described elsewhere, as is the justification for 50 MeV as the optimal electron beam energy.

E-Linac Design Overview

Three main goals have shaped the conceptual design of E-linac: (1) CW operation at high average power; (2) the utilization of existing technology wherever possible; and (3) flexibility toward operation and configuration. For easy reference, the beam characteristics and main RF system parametres are tabulated below. These are followed by an explanation of the choices that led to these values.

Bunch charge (pC)	16	Bunch vital statistics	inject	eject
Bunch repetition (GHz)	0.65	Normalized emittance (μm)	<30π	<100π
Radio frequency (GHz)	1.3	Longitudinal emittance (eV.ns)	<20π	<40π
Average current (mA)	10	Bunch length (FW), inject (ps)	<170	>30
Kinetic energy (MeV)	50	Energy spread (FW)		<1%
Beam power (MW)	0.5			
Duty factor	100%			

The beam power, duty factor, beam energy, and average current are all set by the fission-driver application. The production target sets no requirement on beam emittance, and the given values are representative of thermionic sources and anticipated blow-up.

Number of cryomodules	2, injector & main
Number of cavities	5 total
Number of cells/cavity	9
Type of accelerating structure	Standing wave
Accelerating mode	TM_{010}, π mode
Fundamental frequency	1.300 GHz
Quality factor	$Q_0 \geq 10^{10}$
R/Q per cavity	518 ohm
Active length	1.04 m
Tuning range	± 300 kHz
Input coupler/cavity	2
HOM absorber/cavity	1

With the exception of input coupler and a higher order mode (HOM) absorber, these RF system parameters reflect the selection of the Tesla Test Facility (TTF) cavity technology as the baseline.

	Fission driver	ERL
Accelerating gradient	10 MV/m20	MV/m
Q external of input coupler	10^6	2.6×10^7
Beam power/cavity	100 kW	50 W
2 K heat load/cavity	12 W	62 W
5 K heat load/cavity	8 W	9 W
80 K heat load/cavity	180 W	150 W

These power and heat-load values reflect the choices of CW operation and 10 mA beam current. In the case of the possible ERL expansion, which is not costed in the baseline, numbers assume about 20 mA current and energy recovery inefficiency of 10^{-4}.

Relation of E-Linac to TTF Cavity Unit

From the outset, we have opted to base the e-linac design around technology developed for TESLA, XFEL, and ILC for two reasons: to benefit from the extensive SRF development for these electron accelerators, and to prepare TRIUMF and Canada for participation in ILC if that project proceeds beyond the Technical Design Review (TDR) stage. However, if given free rein from

the start, we would have come to very similar conclusions: five 1.3 GHz SRF cavities housed in two cryomodules.

For a 50 MeV e-linac, high duty factor or CW operation is inconceivable with normal conducting (NC) cavities: depending on the details of the cavity shunt resistance 2–4 MW of RF power (*i.e.*, 4–8 MW of wallplug power) are required in addition to the 0.5 MW of beam power. Contrastingly, implemented in SC-cavity technology, the wallplug power, including cryogenic cooling, is less than 1.5 MW—a dramatic reduction resulting in enormous savings in operational costs.

Theoretical considerations arising from the temperature and frequency dependence of SC cavities built from bulk niobium point to a cost minimum at ≈1.8 K and ≈1.3 GHz. This result, known for 40 years, has impelled SRF R&D on a 30-year course of discovery culminating in electric field gradients up to 40 MV/m. During those decades, the impediments of multi-pactoring, inadequate material purity, and poor metallic surface preparation have been overcome; and with impetus from work on TESLA in the 1990s, 20 MV/m is almost becoming routine. TESLA has metamorphosed into the ILC, which hopes to achieve an accelerating gradient in excess of 31.5 MV/m.

The ILC cavity unit (consisting of a 9-cell cavity, liquid helium vessel, mechanical tuner, RF input coupler, HOM coupler, and 2-phase He pipe) has become the standard building block for SRF linac design. Although it is the starting point for the e-linac design, commonality with the ILC stops at the cavity unit (see Figure 1) and does not extend to the cryomodule level.

E-Linac HLRF Building Block

The e-linac and ILC have very different cryomodule specifications; indeed e-linac has far more in common with designs for ERL injectors. The ILC design is gradient limited, whereas e-linac is power limited, the limitation arising from input coupler design and cryogenic heat loads. A single ILC cryomodule produces almost GeV acceleration, and the per-cavity peak power is 300 kW; but because of the 5 Hz machine repetition rate and the < 1 millisecond beam pulse length, the average values are much lower. For example, the ILC cavity input coupler sustains an average power less than 16 kW. In the fission-driver linac, 500 kW of CW RF power has to propagate through the input couplers and cavities into the electron beam; for that reason, we have chosen the 60 kW CW coupler developed by Cornell (see Figure 2). Two such couplers, per cavity, push the power limit to 100 kW.

Basing the design on existing technology, the e-linac adopts a high-level RF

Figure 1: TTF-style 9-cell cavity. Courtesy DESY.

(HLRF) building block of one 130 kW klystron, two 60 kW couplers, and one 9-cell cavity. The power values refer to the equipment ratings; the devices would be run at slightly lower values so that each building block delivers 100 kW of beam power. Choosing the number of cavities is then simply a matter of enumerating combinations of beam current and accelerating gradient that consume 100 kW/cavity and also result in a beam energy around 50 MeV.

Beam current	Cavity gradient	# cavities	Beam energy	Beam power	Cost or length
5 mA	20 MV/m	3	60 MeV	300 kW	×0.6
10 mA	10 MV/m	5	50 MeV	500 kW	Unit
20 mA	5 MV/m	5	25 MeV	500 kW	Unit
20 mA	5 MV/m	10	50 MeV	1 MW	×2

The first option does not have the required reach of power on target. The third option, although credible, is sub-optimal regarding the γ-photon spectrum and fission cross section, and profits little from the high gradients which are a feature of SRF. The fourth option probably exceeds the available extension in the Proton Hall, less than 20 m. We have confined the range of gradient options to ≤ 20 MV/m because this is the limit of what is achievable with chemical polishing of the niobium surfaces. Electro-polishing allows higher gradients to be achieved, but the necessary infrastructure is not available at TRIUMF in the present scenario.

The second option, 10 mA beam current and 10 MV/m accelerating gradient has been chosen as the baseline; it furnishes a useful electron beam and relies on a conservative expectation for the gradient. We are now in a position to tabulate the broad specifications for the e-linac and ILC cryomodules, and emphasize their differences.

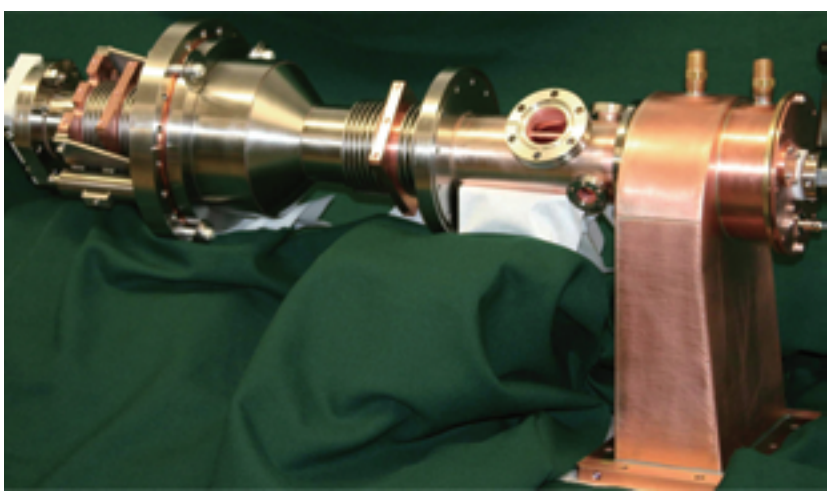

Figure 2: 60 kW CW input coupler. Courtesy Cornell University.

ILC		Fission Driver	
9 cavity/ cryomodule; 9 cell/cavity	Average current 0.04 mA	2,3 cavity/ cryomodule; 9 cell/cavity	Average current 10 mA
1 input coupler/ cavity; 31 MV/m gradient	Average power 16 kW/cavity	2 input coupler/ cavity; 10 MV/m gradient	Average power 100 kW/cavity
2 HOM coupler/ cavity	Duty factor 0.5%	1 HOM absorber/ cavity	Duty factor 100%

CW Operation: Challenges and Benefits

CW operation of e-linac has challenges beyond a limited choice of input couplers and klystrons. There are higher heat loads in all RF components. Indeed, the heat loads in the 5-cavity e-linac at 10 MV/m are 5 times higher than the loads in the 12-cavity TESLA cryomodule at 23.4 MV/m. This thermal challenge, which requires a departure from the TTF cryomodule, is starting to be met by the designers of FEL drivers.

Several parties are working on higher duty factor or CW variants of the TTF unit as drivers for FELs, some with energy recovered (*e.g.*, Cornell, 4GLS) and some without (DESY-XFEL, BESSY-FEL). The Daresbury 4GLS proposed to use the CW two-cavity cryomodule designed by Forschungszentrum Rossendorf and marketed by ACCEL, which is operated up to 8 kW/cavity. The BESSY FEL, utilizing a 16-MV/m gradient, is pulsed at 1 kHz with an average current of a few μA. Neither design, ACCEL or BESSY, is appropriate to fission driver needs. More promising is the Cornell ERL Injector, in which no energy recovery is performed. ERL injectors must be optimized for high current and low energy. The Cornell injector will provide complementary combinations of current and energy ranging from 100 mA and 5 MeV to 30 mA and 15 MeV that result in ½-MW beam power. Despite its unusual RF configuration (five 2-cell cavities operating at up to 14 MV/m), this injector provides an existence proof for a CW-½-MW cryomodule that could well form the basis of the e-linac cryovessel design. Because of the fewer cells, the RF heat load per cavity in the Cornell design is about 2 watts at 2 K.

Nevertheless, CW operation does afford some benefits when compared with a pulsed machine. There are: (i) no periodic beam-load transients; (ii) no periodic Lorentz-force detuning of the cavity; (iii) little or no need for piezo actuators; and (iv) the low level radio-freuqency (LLRF) is, in principle, simpler. In these respects, the e-linac specification is more relaxed than that of ILC. In addition, CW operation implies lower bunch charge for the same average current, and this leads to lower HOM excitation; CW operation is ideal for production targets because it avoids thermal cycling or shocking of the target.

Two–Three Cavity Split

The baseline configuration splits the five HLRF building blocks between a two-cavity injector linac, and a three-cavity main linac. This choice gives us the opportunity to prototype some components in the injector before employing their designs in, or modifying them for, the main linac. This same choice would allow the linacs to be reconfigured at some later date by the insertion of

return arcs, as a testbed for ERL (20 mA, 70 MeV) or RLA (2 mA, 160 MeV) technology. Little additional cost is incurred by this 2–3 split. Neither the return arcs nor the photo-cathode gun are costed in this proposal, but HOM absorbers, variable coupling ratio, and piezos (but not their drivers), form part of the baseline design. The additional cryoplant capacity to run at 20 MV/m is not included in the baseline; however, 20 MV/m could be achieved by running at reduced duty factor.

Electron Source

It transpires that the fission-driver specification is more relaxed than for a comparable ERL injector, as the table below clearly shows. FEL-based light source at ERLs need 6D high-brilliance beams and careful emittance preservation. In practice, this implies photo-cathodes and small emittance and high bunch charge, which leads to extreme space-charge forces that must be overcome by rapid acceleration in high-voltage DC or RF guns. By contrast, the fission driver eliminates its beam on target and has no requirement for brilliance; and so a much simpler, low-maintenance thermionic electron gun is employed.

	Daresbury ERLP	JLab IR-FEL (1.5 GHz)	Cornell ERL	ILC	Fission driver
Charge/ bunch (pC)	80	135	80	100	16
Bunch length (ps)	1-2	0.2-2	2	2	30
Emittance (μm) normalized	1-2	< 30	1	3,0.03	30-100
Bunch rep. rate (MHz)	81.25	75	1300	3	650
Macropulse rep. rate (Hz)	20	CW	CW	5	CW
Beam energy (MeV)	40	80-200	10	300/ cryo	50

Higher-Order Modes

The ERLs are driven to lower bunch repetition rates by the desire for high bunch charge because the FEL lasing varies as the charge squared and because of limitations to the repetition rate of the laser driving the photo-cathode. This results in a dense spectrum of beam frequency components extending to many tens of GHz and strong interaction with the cavity HOMs, necessitating strong counter measures such as ferrite ring HOM absorbers or waveguide HOM couplers. By contrast, HOM excitation in the fission-driver linacs will be minimal due to the long bunches and widely spaced frequency components.

Staging

Staging is more an issue of implementation than design. In principle, the ½-MW capable e-linac could be completed by the end of 2014; however, it is proposed to stage the linacs: providing 5 mA, 30 MeV in mid 2013, and 10 mA, 50 MeV in mid 2015. This staging aligns e-linac with the RIB target staging and provides a useful beam at the earliest possible date. In this scenario, all e-linac components, with the exception of 60% of the HLRF power sources and distribution components, will be purchased between 2010 and 2015. The remaining klystrons, etc, would be purchased and installed early in the subsequent Five-Year Plan.

Conclusion

E-linac will be an exemplar CW, high-power, high-current linac. Due to the intrinsic power efficiency of SRF technology and the compactness and high-accelerating gradient of L-band structures, their adoption provides a cost effective approach to a MW-class fission driver. There are cell, cavity, input coupler, klystron, mechanical tuner, HOM damper, and cryostat designs either pre-existing or close to the e-linac requirements; and this eliminates substantial R&D cost. CW operation poses some challenges compared with TESLA/ILC design, for instance, the higher thermal loading of the cryomodule and the limited choice of klystrons and input couplers, but these challenges are already being met in some FEL light source designs. Indeed, some of the fission-driver specifications are more relaxed than for ILC and/or FEL drivers. For example, the bunch parametres selected for e-linac simplify the source design and provide a degree of immunity against cavity HOM effects.

E-Linac Staging

Whether or not the e-linac construction is staged, the 50 MeV accelerator would naturally be split into two shorter linacs. When staging is an imperative, the question arises "what is the optimal split of cavities between the cryomodules?"

A cryomodule consists of its insulating cryovessel and the interior cold mass of RF cavities and their ancillaries. The baseline design must select the number of modules and the number of cavities each contains. The choice of cryomodule configuration is influenced by technical issues, and by external factors: the science program and RIB targetry needs. At an early stage, it was recognized that the full acceleration would be split between an injector and main linac. The division allows:

- the injector to prototype some components for the main linac;
- the possibility of staging the construction;
- better control over the beam optical properties;
- measurement of beam properties at an intermediate energy;
- greater flexibility in tuning of machine performance; and
- possible expansion path to a testbed for ERL-RLA-based light source.

Having chosen two modules, one must next decide how to split the five RF cavities between them. Purely technical issues, particularly the first and last listed above, would favour a (1+4) configuration of one-cavity injector and four-cavity main linac; but there are other considerations.

In parallel with e-linac design activity, progress has been made on a conceptual design for the new target station and improved understanding of the feasibility and challenge of target designs with >100 kW power handling. As a result of that analysis, a staged approach has been adopted for target operations: 50–100 kW in the 2010–2015 Plan, ramping to ½ MW late in the subsequent plan.

In March 2008, TRIUMF's proposed science programs were the subject of two reviews: the Policy and Planning Advisory Committee (PPAC) provided a Canadian university-oriented prioritization of possible Five-Year Plan components, and a Special Experiments Evaluation Committee (SEEC) gave an international review perspective of the science program and schedule. Both committees underscored the need to "get the science out early."

The e-linac operation must align with the foreseen staging of high-power targets; it would be wasteful of resources to complete a ½-MW-capable linac in the present plan if the corresponding target capacity is not available until the following plan. In addition, the scenario of when the e-linac delivers the first useful electron beam must play in concert with the desired schedule of experiments beginning by mid-2013. These two external imperatives, particularly the second, favour a (2+3) configuration of 2-cavity injector and 3-cavity main linac because this configuration is capable of producing a beam of useful energy and intensity a full year earlier than the 1+4 layout.

The ability to deliver multiple beams (electron and proton) to multiple users as soon as possible helps clear the backlog of planned experiments, and gives the opportunity to win from nature some of its scientific prizes a year earlier. This is an overriding consideration that governs the e-linac choice of a 2+3 cryomodule configuration. Both layouts, 1+4 and 2+3, have the same ultimate reach. A detailed, quantitative analysis of the trade-offs between the 1+4 and 2+3 layouts, in support of these conclusions, is provided in the e-linac technical design below. Here we state precisely what is delivered in each phase of the staged approach.

The e-linac has been cost estimated in 1+4 and 2+3 layouts; there is no difference between the two machines built complete. The 2+3 layout has also been costed in a staged scenario. In the first stage, the entire electron beam line and a complete 2-cavity cryomodule is delivered, with one klystron driver per cavity. This first stage, which is completed mid-2013, includes the entire cryogenic capacity for the eventual 2+3 machine.

In the second stage, ending late in 2014, an additional Mark-II cryovessel is delivered, but neither the three extra cavities nor their klystrons. (One can imagine developing variants on that precise mix of equipment as the project evolves.) The Mark-II vessel benefits from lessons learned from the 2-cavity module and the planned R&D on high-power input couplers. Funds to complete the first 2 stages are requested in this plan. In the final stage, additional cavities and klystrons would be installed making the full beam energy and power available. Funding for the final stage, approximately C$4 million dollars, will be requested in the 2015–2020 plan, or solicited from other sources.

At an early stage, it was realized that the cryogenic plant and the high-power RF sources are the main cost drivers for e-linac. Both these items are to some

degree discretized. Cryoplants come in standard ratings, and it is cheaper to source one large unit rather than combine two smaller units to achieve the equivalent cooling capacity. Similarly, vendors of klystrons charge a substantial overhead for single units. On balance, the project total cost will be impacted less if we add incrementally to the RF power rather than the cryogenic capacity. Hence, the decision to install the additional klystrons in the final stage.

E-Linac Technical Design

Fission driver

The major components of the fission driver are a 20 MeV injector, followed by a main linac section accelerating from 20 to 50 MeV. The linacs will be located in the Proton Hall, which provides ample space for the baseline machine and a small ring, if so desired.

Injector Section

The injector is composed of a 100 keV electron source, a first buncher cavity, a 0.5 MeV capture section, followed by a 0.5–20 MeV linac containing two 9-cell SRF cavities. The injector linac terminates in an electron-beam energy analysis section containing a 30° spectrometer magnet and Faraday cup, etc. In addition, there are optics-matching sections between these components and steering magnets upstream and downstream of the linac tank for aligning the beam trajectory with the cavity axis. A short dogleg (2 dipole magnets) is envisioned immediately downstream of the injector linac for compatibility with later options (ERL or RLA).

RF cavities are driven with sinusoidal waveforms. The purpose of bunching is to make the electron pulses short enough so that all particles receive (almost) equal acceleration on the crest of the wave. The buncher cavity is used to prepare the beam for efficient acceleration and additional bunching in the capture section. One takes advantage of the fact that, while the beam is not yet relativistic, a small voltage modulation can achieve a significant bunching action. Once the beam becomes relativistic, very large energy spread and/or a magnetic chicane are needed to produce bunching in a short length of beam line.

Electron Source

The source is a 100 kV DC thermionic gun, with a gridded cathode producing >10 mA (average) electron current. The modest extraction voltage, 100 kV, is chosen to avoid the inconvenience of an SF_6 bath to avoid arcing, as occurs at higher voltage. The source outputs 170 ps FW bunches each of 16 pC with a bunch repetition rate of 650 MHz. The grid electrode converts the gun from diode to triode operation. Modulating the grid causes the gun to be conducting for 45° (or less) of the RF cycle allowing the beam to emerge pre-bunched at the anode. Designs of this sort have been pursued successfully at NIKHEF-FELIX and the Mitsubishi Electric Corp. Microtron. The transverse emittance typical of a thermionic gun at this current level is some 30 μm (normalized).

Buncher Cavity

The buncher is a normal conducting RF cavity excited at 650 MHz with an amplitude of approximately 15 kV and phased at 90° with respect to the beam. The buncher produces no net acceleration, but rather imposes an energy modulation from head to tail of the bunch; and so its power requirements are modest and are met with a commercial solid-state amplifier.

Capture Section

The capture section performs two functions: modest acceleration and additional bunching. Injecting a 100 keV beam ($\beta = 0.55$) directly into a $\beta = 1$ RF structure results in very inefficient acceleration because of the mismatch in transit time; for example, injection into a 10 MV/m 9-cell structure would result in ≈ 8 MeV energy gain, rather than 10 MeV. There are also deleterious transverse effects, leading to apparent emittance growth, associated with such low-energy injection into a high-gradient SRF structure.

The capture section accelerates the beam to ≥ 500 keV ($\beta = 0.863$). In addition, the first cell of the capture section imposes further energy modulation to improve the bunching throughout the remainder of the linacs. The capture section could be implemented either through an NC-graded-beta structure or four independently phased NC cells each operating at ≈ 150 kV and driven by inductive output tubes (IOTs); or two SC low-gradient single cells within the entrance of the injector linac. Costing favours the latter, but beam dynamics favours the former lower-gradient option. A detailed analysis will be performed leading to a final choice between these options.

Injector Linac

In final operation, running at 10 MV/m gradient, the injector will produce a 10 mA electron beam at 20 MeV. In the proposed staging, the injector is the only module completed by mid-2013. Using the available headroom in the cryogenic cooling capacity, this linac can be run at 15 MV/m and apply a 30 MeV beam to the RIB production target. The 15 MV/m operation is a conservative estimate based on $Q_0 = 10^{10}$; if the low-field Q_0 attains 2×10^{10} and there is no Q-droop at the higher field, then 20 MV/m operation and 40 MeV beam energy is possible without exceeding the heat load limitation.

Main Linac

The main linac consists of three 9-cell TTF-style SRF cavities housed in a single cryomodule. The cavities operate at 10 MV/m, and each has an active length of 1 m. Each cavity is fed by a single 120 kW klystron via two 50 kW coaxial input couplers. The rate of photo-fissioning drops from 7 to 6×10^{13}/s, if the beam energy is reduced from 50 to 40 MeV, which is almost negligible. Consequently, there is no strong imperative to consider a fourth cavity to improve the fault tolerance of e-linac to events such as malfunction of a cavity tuner. In any case, tuner failure is very rare.

Electron Beam Line

The electrons are transported from the output of the main linac to the target station by a magnetic focusing channel, or beam line. An electron beam of 50

MeV is quite easy to manipulate. The low rigidity, Bρ is only 0.17 Tm, implies we can transport it with relatively inexpensive focusing elements, but the corollary is that the beam is easily perturbed by outside influences such as stray magnetic field from the cyclotron and the Earth's field. We can minimize these effects either with good shielding or sufficiently strong periodic focusing. The economical optimum is to do some of each.

We propose to shield the beam pipe with mu-metal or similar, to a level of less than 0.1 gauss. Then an average Courant-Snyder beta-function of 3 m is sufficiently small. With a phase advance per cell of 90°, this requires 15 focusing cells for the 60 m beam line length. For nominal emittance, this results in an average beam radius (2σ) of near 1 mm. The cells can be solenoids or FODO quadrupole doublets. For the solenoid option, 15 are needed, with, for example, a field of 0.5 T and length of 0.25 m. For the quadrupole option, 30 magnets are needed, but the integrated strength (gradient times length) is only 0.12 T. This latter case is the one we have costed.

Beam Spot on Target

The small emittance means that the beam size is naturally small, about 1 mm. The desired beam size on target is around 1 cm diameter to spread the thermal load. One could devise a large-beta section to expand the beam optically, but this also expands any problematic halo. A better solution is to focus to a naturally small size on target and raster the beam over the required size at a rate that is fast compared with thermal time constants. Dual horizontal and vertical AC steering magnets operating at, for example, 12 and 120 Hz located just upstream of the final matching quadrupole will allow us to customize the beam distribution over the 1 cm^2 spot size.

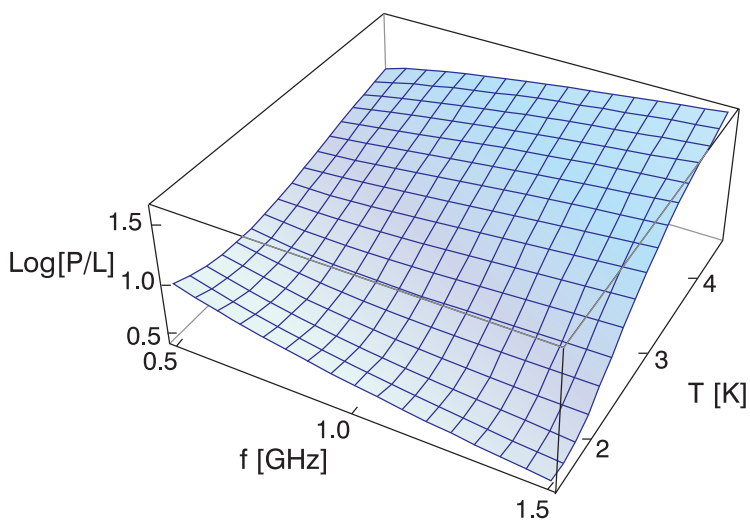

Figure 3: Three-dimensional surface in temperature, frequency, and power-per-length space.

Superconducting Linacs

Introduction

The chief difference between the injector and main linacs is merely the number of cavities within the cryomodule; hence their common RF design features can be reported together.

SC Versus NC

We have chosen superconducting (SC) linacs because high duty factor and high field gradient operation is only possible with SC cavity structures. Typically, linacs are pulsed with RF power supplied for only a fraction of the time, referred to as duty factor. The enormous power requirement of normal conducting (NC) cavities has limited their use to duty factors of a few percent or less. Both NC and SC cavities can produce high gradients, tens of MeV/m, but only in the SC case can this be sustained in continuous operation.

For CW operation, the power dissipated in the walls of a NC structure is potentially enormous, but not so for SC cavities. The power is $P = V^2/[2(R/Q)Q_0]$. The ratio of shunt resistance to quality factor (R/Q), which depends on cavity geometry, is not vastly different between NC and SC cases; and so the formula is dominated by the bare quality factor Q_0. The microwave surface resistivity of Nb at 2–4 K is 10^{-5} smaller than for Cu at 300 K; thus $Q_0^{SC} \approx 10^5 \times Q_0^{NC}$.

For the Cu cavity, the AC power must include the efficiency of the RF power source, typically 0.5. For the Nb cavity, the AC power must include the Carnot efficiency F_C to remove heat at liquid He temperature, and a refrigerator efficiency of about 0.25. Overall, SC operation reduces the wallplug power (to establish the electric fields) compared with NC, by a factor 200, thus reducing power consumption from MWs to kWs.

Frequency and Temperature Choice

The superconducting niobium cavities will be operated at 1.8 K and excited at a microwave frequency of 1.3 GHz. The true figure of merit for an accelerating structure is the power-per-unit length (P/L) at constant gradient (E_0) removed at room temperature (T_{sink}):

$$\frac{P/L}{F_C} = \frac{E_0^2}{\eta^2}\frac{c}{f}\left(R_{dc} + R_{BCS}\right)\frac{\left(T_{\text{sink}} - T\right)}{T}$$

Here f is the frequency, T is the liquid He operating temperature, and η is a structure factor. The resistivity has two components: the direct current value R_{dc}, and the Bardeen-Cooper-Schrieffer (BCS) component:

$$R_{BCS} = 90\times10^{-6}\left(f^2/T\right)\exp(-1.76T_c/T)\,.$$

For niobium, with $T_c = 9.2$K, R_{BCS} at 1.3 GHz is about 800 nΩ at 4.2 K, and drops to 15 nΩ at 2 K. The logarithm of power-per-unit length is plotted below, Figure 3. The merit figure clearly shows that at sufficiently low temperature, P/L is minimized at higher frequency. The optimum is around 2 K and 1.3 GHz (see Figure 3).

Some 40 years ago, Schwettman pointed out that the cost minimum occurs at 2 K and 1.3 GHz [H.A. Schwettman, IEEE Trans. Nuc. Sci. (1967)]. The first L-band SRF linac (the 27 m long, 50 MeV SCA) was built at Stanford 30 years ago; however, there were three impediments to high-Q and gradient that had to be conquered: (1) material purity, (2) multipactor, and (3) surface quality. With major impetus from CESR, LEP, CEBAF, TESLA and ILC, etc, all these problems have been overcome. The advent of so-called high-RRR material by zone refining solved the material purity problem. Multipactoring, an electron-avalanche phenomenon, was not remedied until the early 1990s. The solution was to make a spherical cavity. Given their superior mechanical stability, elliptical cavity shapes are now universally adopted for $\beta = 1$ SRF cavities. Finally, the third problem is addressed by a variety of procedures (clean room assembly, high-pressure water rinsing, chemical etching, and electro-polishing) that are available in combination for the preparation of almost defect-free Nb metallic surfaces.

Although the gradient planned for the fission driver is a modest 10 MV/m, it is intended both to leave an upgrade path to an ERL operating at 20 MV/m and to have an intermediate stage of 15 MV/m running of the injector linac. Thus, the 20 MV/m promise of 1.3 GHz structures is further appealing on that account. It is therefore proposed that the fission driver be based on 1.3 GHz technology, whereby maximum benefit can be gained from the years of development for the TESLA, TTF and subsequent ILC accelerators. This frequency choice has provoked industry worldwide to facilitate the manufacture of high-power RF devices and low-level RF control systems so that fission drivers are now in a position to reap the rewards.

RF Power Source

Once the frequency is chosen, the pivotal choices are the power source and the input coupler. For CW operation of e-linac, these choices are contingent rather than free. Each 9-cell cavity will be driven by a 130 kW CW klystron through two 60 kW coaxial input couplers. These are rated values; routine operation will be at slightly lower values. There are a total of 5 TTF cavities, 5 klystrons, and 10 input couplers.

Possible Power Sources

Vacuum tubes suitable for particle accelerators are triodes, IOTs, and klystrons. Klystrons and triodes have been the traditional power source because they produce high power and offer high gain (50 dB) with efficiencies exceeding 50%. Presently, in L-band, IOTs offer only a few tens kW CW. Although appropriate for ERLs, they are not adequate for the fission driver. A variety of manufacturers offer pulsed klystrons rated at up to 5 MW peak and 100–250 kW average power, but the reduced duty factor means they are not applicable to the fission driver. Although several manufacturers have the capability to build a 120 kW CW klystron, only *e2V* (a UK supplier of electron tubes, sensors, and semi-conductors) has such an item in its standard-model data sheets, and their offering has been selected for the baseline design.

Klystron General Specification

The RF system will utilize 120 kW CW klystrons, K3415LS, manufactured by *e2v*. This is a 7-cavity, factory-tuned, high-efficiency, high-gain, broad-band,

water-cooled klystron amplifier, with designed saturated output power of 135 kW CW. Because of the high gain, the maximum required RF drive power is ≤ 15 W in any operating condition. The klystron is designed to allow rebuilding up to three times during its operating life, thus reducing the need for a large spares inventory. The klystron efficiency must be high to minimize the operating costs of the linear accelerator and is equal to 68% when operated in saturation mode of 135 kW.

Input Couplers

At the present time, the highest power-rated commercially available CW input coupler at 1.3 GHz is the 60 kW Cornell-designed coaxial coupler available from CPI-Eimac. This coupler has been chosen for the baseline (see Figure 3).

Input couplers convert power from the waveguide mode used to transport RF to the cavity fundamental EM-mode. The main requirements for the e-linac coupler(s) are to deliver 100 kW CW RF power to the beam (per cavity), provide strong and variable coupling, minimize cryogenic heat leaks, provide a multipactoring-free geometry, and minimize transverse kicks to beam. The last requirement pertains to a possible expansion to an ERL. The feature of variable coupling allows us to operate the cavity as a matched load at high- or low-beam power (traveling-wave mode), or for energy recovery (standing-wave mode), which avoids wasteful power reflected to the isolator and resistive load.

There are two possible design options: a waveguide coupler or a coaxial coupler. Both have a large set of (differing) merits and demerits; however, only the coaxial type can provide a large, variable coupling range. Additional advantages of the coaxial coupler include lower chance of multipactoring, compactness, and smaller penetration of the cryomodule resulting in lower heat load.

RF Distribution Scheme

The klystron power is delivered via a circulator and RF load, followed by a waveguide, a splitter and RF load, two waveguide-to-coaxial transitions and, finally, the two equal input couplers delivering 50 kW each. The design will be modeled on the Cornell ERL injector.

The choice of the distribution architecture is inherently linked to the choice of RF power source. Typically, the choice is between (i) a single high-power source whose output is divided between the cavities via a network of splitters, or (ii) multiple lower-power sources each dedicated to single cavity. This choice amounts to a compromise between cost economies of a high-power source versus the cost and complexity of the distribution scheme. The single-source configuration usually offers less flexibility in the cavity phasing and in amplitude regulation.

Because there is no CW, MW-class klystron available at 1.3 GHz, multiple 100 kW klystrons (one per cavity) is the only option for the fission driver. Multiple klystrons have the virtue of redundancy: if one fails, you can still run the facility. indeed, by raising the gradient in the remainder cavities, there is little or no change in the beam energy.

HOM Damping

The HOMs are the cavity resonances above the fundamental mode, and they may be longitudinal (monopole) or transverse deflecting (dipole), or other modes. The HOMs provide an opportunity for additional ohmic losses and heating at 2K, and for collective beam instability, both deleterious. The HOM power varies as the bunch charge squared. The fission driver principal line of defense against HOM effects is avoidance: the bunch charge is low; the beam frequency components are widely spaced compared with the spectrum of cavity resonances; and the bunches are long, so their power spectrum does not extend to very high frequency. These measures alone are probably not sufficient to overcome the HOM effects and will be supplemented by HOM absorbers.

The cavity HOMs will be damped to safe levels by opening up the beam pipe to 90 mm diameter, thus allowing (almost) all damaging modes above ≈ 2.6 GHz to propagate to a ceramic absorber; the absorber design is intended for the DESY XFEL. Dedicated loop couplers, targeted at particular groups of modes will be installed as needed; again XFEL designs are available. To preserve the option of an ERL and short-bunch operation, sufficient longitudinal space is allocated to replace the ceramic absorbers with the Cornell ferrite design at a later date.

The bunched beam break up (BBU) instability describes a multitude of possible effects: single- and multi-bunch in single-pass linacs, and regenerative multi-pass effects in ERLs. For e-linac, the most severe constraint would come from ERL operation and the transverse BBU current threshold arising from a single HOM—leading to the requirement that HOM quality factors must be damped below 10^4.

Because the cavity has 9 cells, each monopole mode is split into a passband of 9 frequencies, and each dipole mode is split into passbands of 18 frequencies. This dense spectrum of resonance frequencies is problematic for linacs with low bunch repetition frequency. Of course, cavity modes that do not coincide with bunch Fourier components are irrelevant, and that is the beauty of having a high bunch repetition frequency: in the e-linac there are components only at multiples of 650 MHz.

Cavity modes inherit their nomenclature from the single-cell modes, which are enumerated by their indices ϕ,r,z. Generally, cavity modes with frequency above the cut-off frequency of the corresponding waveguide mode will propagate into the beam pipe.

Monopole Modes

The beam is accelerated by the fundamental mode, TM_{010}, at 1.3 GHz. The second harmonic TM_{011} at 2.4 GHz is well separated from nearest beam harmonic at 2.6 GHz and does not pose a problem. The other TM_{01} modes (*e.g.* TM_{012} at 3.8 GHz) are above their cut-off (2.55 GHz) and unlikely to pose a threat.

Dipole Modes

The lowest dipole bands are the TE_{111} (1.62–1.79 GHz) and the TM_{110} (1.8–1.89 GHz). Both are well separated from nearest beam harmonic at 1.95 GHz and do not pose a problem. The other TE_{11} modes are above their cut-off (1.95 GHz) and unlikely to pose a threat. However, there may be problematic TM_{11}

modes below their cut-off frequency of 4.06 GHz. A more comprehensive analysis, using electromagnetic modeling software will be used to isolate these and higher modes, and to devise dedicated means of mode damping, if required.

HOM Damper Choices

There are typically three different means of HOM damping: coaxial loop coupler, waveguide, and beam pipe absorber.

Beam Pipe Absorbers

The beam pipe is widened and used as a circular guide that allows the HOMs to propagate out of the cavity into a wideband load that is cooled either at 5 K or 80 K. The coupling to the HOMs is improved over the waveguide approach, and the layout is simplified. In e-linac, we have chosen to increase the beampipe radius to 45 mm, as compared with the TESLA and ILC standard of 36 mm, to propagate more cavity modes.

There are two variants of the absorber design: the Cornell ferrite absorber, with a bandwidth up to 100 GHz and maximum dissipation of 200 W cooled at 80 K, and the XFEL ceramic absorber good for a few tens of watts, which is a near CW adaptation of the TESLA design. The latter is a factor eight less costly, is completely adequate for the < 1 Watt/cavity HOM losses anticipated for the fission driver, and has been selected for the baseline costing.

Cavity Frequency Tuning Systems

The INFN coaxial type mechanical tuner was adopted for the cost estimation purposes of the baseline design of the fission driver. This design has been chosen for ILC, and its adoption would afford any technology spin-offs from the e-linac greater synergy with ILC. The coaxial tuner is wrapped around the cavity and takes up less longitudinal space inside the cryostat, which is an important consideration for the ILC. There is no such concern in the fission driver "real estate". The recent development at DESY of the Saclay lateral tuner, which has been operated successfully for many years, for application to XFEL and the imminent mass-production of >800 units, will yield significant cost reductions. Therefore, the final choice of tuner has yet to be made. Both tuner designs are available with piezos for fine-tuning, and both meet or exceed the specification for e-linac.

Requirements

Tuners are employed to mechanically alter the shape of the cavity to set the resonance frequency in coincidence with the drive frequency. The tuning system must compensate for perturbations to the cavity geometry such as: (1) mechanical fabrication tolerances, (2) contractive forces during cool down to 2 K, (3) Lorentz force detuning as the cavity is electrically energized, and (4) acoustical vibrations (microphonics).

The dominant detuning contribution is the length contraction during cooldown, which results in a static 600 kHz rise in the resonance frequency. Because the fission driver is operated truly CW, with no macro-pulsing of RF power, the Lorentz detuning (of 50 Hz) is also a static effect, and its compensation is simpler than in pulsed linacs. The fission driver is heavily beam loaded,

and the microphonic detunings all lie within the loaded bandwidth of the cavity. For operation as an ERL, a fine-tuning resolution of 1 Hz would be required. The incremental cost of incorporating piezo actuators, but without their drive or control systems, is small when implemented early, and has been included in the costing to allow an expansion path to an ERL. Retrofitting would be more costly.

Cryomodule Configuration

Though it is conceivable to place all five cavities in a single cryomodule, it is preferable to split them between two modules: an injector and main linac. The injector serves as a prototype for the cryogenic, vacuum, and mechanical systems of the later main module. The split of injector and main cryomodule gives a natural place to incorporate the return arcs of the ring in the event of an expansion to an ERL or RLA, and it provides a natural opportunity to stage the construction. Thus, the precise division of cavities between modules is influenced by two factors: (1) expansion to light-source applications by reconfiguration of the linacs as an ERL or RLA; and (2) what beam capability can be provided to the proposed RIB experimental schedule in early 2013.

It is standard practice to split an ERL or RLA into injector and main linacs. In particular, for an ERL, it is desirable to have the lowest energy injector because there is no energy recovery in this part and the highest current since this has almost no impact on the RF power consumption of the main linac, although it does influence beam losses. The following table compares possible assignments of cavities to modules for three linac applications.

Application	1+4 configuration	Power (kW)	2+3 configuration	Power (kW)
Fission driver reach	10 mA, 50 MeV	500	10 mA, 50 MeV	500
ERL reach	20 mA, 85 MeV	100	20 mA, 70 MeV	200
RLA reach	2.5 mA, 180 MeV	500	1.9 mA, 160 MeV	475

The ERL/RLA scenarios are based on 20 MV/m accelerating gradient. Excepting the ERL, the power rating is both the RF power consumed and the beam power. For the ERL, the value is the power consumed in the injector; the instantaneous beam power is 170 kW and 140 kW, respectively, for the 1+4 and 2+3 cavity assignments. Evidently, the 1+4 configuration gives better opportunity for component prototyping and has slightly stronger expansion potential for an ERL or RLA.

We turn now to project staging and compare which of two possible cavity assignments will provide the most useful beam for RIB production in 2013.

	1+4 configuration	Power (kW)	2+3 configuration	Power (kW)
E-Linac reach in 2013	5 mA, 15 MeV	75	5 mA, 30 MeV	150

Both options are based on a conservative projection of the maximum achievable gradient with $I_0 = 10^{10}$ and the planned cryogenic capacity; the 2 K heat load at 15 MV/m is more than double that at 10 MV/m. Both options have the same ultimate reach of ½ MW. Clearly, from the table, the configuration of 2-cavity injector and 3-cavity main cryomodule has several advantages.

- Better match to the requirements of its immediate nuclear physics and materials science user community: ≥ 30 MeV is guaranteed for mid-2013.
- Beam power capability will, literally, drive the target development program for several years.
- Not prohibitive for expansion to testbed for fourth generation light source.

Two-Cavity Cryomodules

The preferred division into two almost equal two- and three-cavity cryomodules places them in juxtaposition to a commercially available two-cavity cryomodule, based on the Forschungszentrum Rossendorf design, from the European vendor ACCEL with a guaranteed field gradient of 15 MV/m. Inevitably, it will be asked "Why not buy rather than build?" The product offered is TTF technology upgraded to CW operation, but for low power applications, up to 8 kW/cavity. This design does not meet the e-linac specification of 100 kW/cavity and would require substantial redesign for the higher anticipated heat loads. Moreover, one of the motivations of the e-linac is to transfer SRF technology to a Canadian fabricator and end the reliance on purchases from overseas.

Cryoplant and Expected Heat Load

The cost estimate for cryoplant is based on the purchase of a Linde LR280 helium refrigerator with a capacity of 900 W at 4.5K with liquid N_2 pre-cooling.

The starting point for a heat load calculation is the TESLA TDR for a 12-cavity cryomodule. Scalings appropriate to the 10 mA fission driver or 100 mA ERL are applied for beam currents, duty factor, and number of cavities, and where different component designs are selected. The table below gives the heat load for the sum of all cavities (5), input couplers (10), bellows (5), etc. For comparison, the table shows the combined static and dynamic heat load of the 12-cavity TESLA cryomodule operating at 23.4 MV/m. In all cases, an intrinsic $Q_0 = 10^{10}$ is assumed. In addition, the heat load to the three-cavity main linac in ERL-mode is provided.

	Fission driver, 10 MV/m 5 cavity	ERL 20 MV/m 3 cavity	TESLA TDR 23.4 MV/m 12 cavity
2K RF Load (W)	52	124.8	4.95
2K Sum (W)	55.5	188.6	9.05
5K Sum (W)	36.4	25.9	15.94
80K Coupler load	890	198.8	80.9
80K Sum (W)	897	450.9	183.02

The e-linac 2 K and 80 K heat loads are roughly 5 times the TESLA values, despite having 40% of the number of cavities. The severity of the 2K load is ascribed to establishing CW, rather than pulsed, RF electric fields, and scales quadratically with gradient; while the large 80 K load is mostly due to the 500 kW of beam power that must first flow through the input couplers. Refrigeration for the ERL option is not included in the baseline cost estimate.

Budgeted Heat Loads

It is customary to prepare from the estimated loads above a budgetary load. There are two reasons for this practice: (1) A larger budget allows upgrading to higher gradients without installing new refrigeration. Plant and cost are heavily discretized, which means that adding incremental cryo capacity is costly. Therefore, it is better to overspecify in the first place.

(2) Cavity quality factors and peak gradients typically have a spread, so one should leave some overhead in case many Qs are lower than design.

The 2 K budget for injector and main linacs is 100 W (the estimated load is 60 W). This represents a load of 400 W at 5 K, to which must be added the direct 5K cavity load of 40 W and loads from transfer lines and valve boxes, etc, of 170 W for a total of 610 W. Introducing an engineering margin of 50% implies a budget of 900 W cooling at 5 K.

Cryovessel Design

Currently, there exist two proven designs, with different relative merits, that may be used as a basis for the e-linac cryomodule: (1) the TTF/TESLA/ILC, and (2) the CEBAF and SNS modules designed at Thomas Jefferson Laboratory (TJNAF). It will be an engineering exercise to choose between these designs, as both are viable starting points for the E-linac design. The cost estimation is largely independent of the design, because for single modules the development cost will dominate. The estimate was prepared from the SNS high-β design, with a small-quantity overhead factor of 3 applied.

CW High-Power Cryomodule

Cornell has made strong progress in developing a high average-power CW cryomodule design, The Cornell ERL injector design is a derivative of the TTF cryovessel. In addition to a redesign of the cold mass, the Cornell cryovessel incorporates the following modifications required for CW operation.

- Increased diameter of 2-phase 2 K He pipe for CW cavity operation;
- Direct gas cooling of chosen 5 K and 80 K intercept points with He-gas flow through small heat exchangers;
- No 5 K shield, only a 5 K cooling manifold and intercepts;
- New end-cap and feed-cap concept with reduced length;
- Three layers of magnetic shielding for high Q_0;
- HOM absorbers between cavities; and
- *In situ* bake for input couplers, no further atmosphere exposure, no pre-conditioning.

Technical Systems

Vacuum Systems

The vacuum system of the linac facility, which has an overall length of 80 m, can be divided into three parts with different vacuum requirements and volumes: the 5-m long source area operated at 10^{-9} torr, the 15 m cold section composed of the two cryomodules (injector and main linac) with pressure 10^{-11} torr, and the 60 m beam line-to-target operated at 10^{-8} torr. These requirements are standard ultra-high vacuum (UHV) practice at accelerator laboratories and will all be met with commercially available equipment. Indeed, the 10^{-11} torr in the cold section is a consequence of operation at 2 to 4 K and not a requirement. However, extreme cleanliness is a requirement. To limit the possibility of particulates migration into the cold section, the room temperature upstream and downstream sections are separated by gas flow restricting diaphragms.

Generally, the vacuum pipe size is chosen consistent with molecular conductance and the non-interception of beam halo. The residual pressure is chosen consistent with minimal losses from residual gas scattering, and the cryomodule requirement for extreme cleanliness against contaminants. The 37 mm diameter pipe is consistent with halo losses below 10^{-4} in the source region and below 10^{-7} in the beam line, assuming an emittance $\leq 100\pi$ μm normalized. The vacuum pressure in these regions is consistent with fractional loss per metre (of beam line) from out-scattering below the 10^{-6} level.

Vacuum Pumps and Valves

The UHV system is brought to the nominal pressure in stages: rough pumping, pumping to high vacuum, and pumping to UHV. The roughing from 1 atmosphere to 10^{-3} torr is done by a dry mechanical (scroll) pump. The pumping down to 10^{-6} torr is performed by a turbo pump backed by the scroll. A turbo-scroll assembly with appropriate gauging and valves is called a turbo pumping station. Ion pumps are commonly used to create the UHV of 10^{-8} torr or lower. These pumps are characterized by cleanliness, ability to pump different gases, and maintenance- and vibration-free operation.

The electron gun, buncher, and capture cavities will each have one turbo station and ion pump. Each of the cryomodules has two turbos and two ion pumps, while the beam line has two turbos and five ion pumps.

Electron Beam Diagnostics

The e-linac beam diagnostics measures several key quantities:

- the beam positions along the linear accelerator chain and along the transport line to the target station;
- the transmitted beam current through these same components;
- the beam emittances after the source, buncher and capture cavities, and after passage through the injector and main linac;
- the beam momentum and spread immediately after passage through the two linacs as a means to adjust the cavity phasing for on-crest acceleration; and
- the beam RF phase compared with LLRF and some measure of bunch length.

Instrumentation has been identified to perform all these measurements.

Dynamic Range

The diagnostic strategy will foresee that initial commissioning of the linacs and set up of the beam line will be conducted with perhaps 10 μA while operations will run up to 10 mA.

Thus, as is common in high-power accelerators, the diagnostic strategy must encompass a large dynamic range of order 10^3. There are two aspects to this problem: (i) how much to turn up or down the "source", and (ii) how to instrument the electron beam at various average intensities. Typically, equipment is limited from both ends. At too low intensity, signals are weak and noisy; and at too high intensity intercepting monitors are destroyed by the beam.

The present concept is to adjust the average beam intensity by a combination of throttling back the electron gun and implementing means to macro-pulse the beam, including control over the repetition rate and pulse length. This allows us to avoid either very low bunch charge, or the full beam power. A key feature of this procedure is that the RF system is not pulsed, and there are no Lorentz-detuning transients; however, some periodic beam-loading must be accepted.

Each of the various beam monitoring devices has a finite dynamic range. Consequently, the recommended strategy is to align and characterize the electron beam based on low current position and other measurements, and then to bring the beam to operations level based on beam current measurements. The position will hardly change, but the losses may, so loss monitoring is an important tool.

Beam Position Monitors

The electron beam position system is the backbone of the diagnostic system and will provide the beam horizontal and vertical positions at each magnetic element, and at the entrance and exit of each cryomodule. The desired measurement accuracy is 0.1 mm, with a resolution of 25 μm, over the linear range of the BPM, ±5 mm.

Each beam position monitor (BPM) is composed of four buttons, feedthroughs, and head electronics to perform the sum and difference of the

two signal pairs to provide horizontal and vertical information. The BPM system should have the largest possible dynamic, and baseband processing with a log demodulator will be performed.

Acquisition Frequency

BPM signal acquisition and processing at 1.3 GHz is a costly business: signal attenuation in cables is relatively large, and processing electronics is not commercially available at reasonable cost. Furthermore, as a general principle, it is recommended not to acquire beam signals at the same frequency that is broadcast by the HLRF system because inadvertent RF leakage will contaminate the beam-induced signals. These problems all disappear if the acquisition is moved to 650 MHz; and for that reason, the bunch repetition frequency has been set at 650 MHz. This has the side effect of doubling the bunch charge (from 8 pC at 1.3 GHz) to 16 pC, with a minor impact on the HOM losses.

Beam Transmission

During initial commissioning at low energy and modest beam currents, an intercepting device such as a 10 kW Faraday cup will be used to verify beam transmission and losses. At higher beam power, non-intercepting devices will be employed. Commercially available Bergoz DC current toroids have a variety of range options including 10 μA to 10 mA and offer high precision.

Beam Transverse Profiles

Beam "profiles" are a valuable tool: the beam spot from a scintillator (nA-μA) or fluorescent screen (μA-mA) instantly verifies that the electron beam has been threaded through the accelerator and beam line during commissioning. Detailed profile measurements allow the estimation of emittance growth. Profiles will be measured before the capture cavity, after the injector and main linacs and before the target station. The baseline is to use a fluorescent screen before the injector linac, and OTR screens before and after the main cryomodule, and possibly wire scanners in the transfer line and close to the photon converter due to the high radiation level.

Momentum Analysis

The phasing of the cavities is optimized based upon maximizing the beam energy gain as measured by the deflection in a spectrometer magnet. Two analysis stations, each equipped with a 30° bend, slits, and 10 kW Faraday cup, are each placed immediately after the 20 MeV injector and the 50 MeV main linac. The desired resolution is ≈ 0.5%.

Longitudinal Beam Structure

The diagnostic system will provide the bunch RF phase compared with the LLRF signals and bunch longitudinal profile, *i.e.*, bunch shape. The bunch phase is crucial to optimizing the accelerating cavity phasing, and will be measured, with an accuracy of 1^0 at 1.3 GHz, immediately prior to the capture section and the injector and main linacs. The beam phase can be measured from the sum signal of BPMs. It can also be read back from the cavity field probes with HLRF turned off.

Personnel Radiation Protection System

In all cases that personnel are present in the e-linac vault, the Radiation Safety System (RSF) will ensure dose rates below the low occupancy limit, 10 μSv/hr. Conditions which exceed this limit, proton spills in the 4-North beam line, will result in alarms and immediate evacuation. Residual activity exceeding the 10 μSv/hr limit in the e-linac vault will result in denied access to this area. By prescription and design, such events should be exceedingly rare.

ISAC-II Experience

The ISAC-II SRF accelerator operators have chosen to designate the accelerator vault as an exclusion zone: no personnel are permitted whenever the RF systems are energized or the particle beams are present. This restriction was occasionally inconvenient during the accelerator commissioning but has the merit of greatly simplifying the Radiation Safety System. The balance of the ISAC-II experience has been positive, and this exclusion-zone principle will be applied to the e-linac in the Proton Hall.

No personnel will be admitted to the Proton Hall whenever the high-power RF systems are energized or if there is accelerated electron beam present. However, to avoid scheduling conflicts, personnel will be permitted in the e-linac vault while there is a proton beam in the 4-North beam line; this will allow maintenance to be performed on e-linac without interrupting proton-beam delivery to the target station. Thus, while the majority of the e-linac components will be unshielded, the proton beam line will be heavily shielded.

Shielding from Proton Losses

The requirement for shielding the e-linac vault from the 110 μA, 500 MeV proton beam line is two-fold: shield for chronic loss, and shield for rare catastrophic loss. Catastrophic loss is defined as point loss of the full beam sustained for up to an hour. Based on experience from the BL2A proton beamline, the chronic losses can be kept below 1 watt per metre (≈1 nA/m), which is the widely accepted limit for hands-on maintenance of a proton facility.

We have chosen layouts for the e-linac and BL4N shielding consistent with the philosophy that passive means of protection, *i.e.,* more shielding, are preferred over active methods such as double layers of instrumentation. Six meters of shielding in the form of 3.5 m of steel and 2.5 m of concrete lead to dose rate below the low-occupancy limit, < 10 μSv/hr (1mR/hr), given the expected chronic losses, and to dose below 50 mSv/hr in the forward direction from a catastrophic loss. Steel and concrete are preferable to concrete alone, as the heavier nuclei provide effective attenuation through spallation. In this case, only neutron monitors outside the shielding are required and the proton-related component of the Radiation Monitoring System becomes an extension of the existing safety system, and will use TRIUMF's standard neutron monitoring hardware and techniques.

Activation from Electron Losses

The activation from 50 MeV electrons comes about from the photo-neutron and photo-spallation reactions when the beam is stopped. There will be both air activation and activation of the accelerator components. The stopped beam

will come about from low-level chronic losses throughout the accelerator and from the beam dump and targets where the beam is directed.

Air Activation

It will be important to fully shield the tuning dump and target(s) to minimize air activation by high-energy neutrons. Air activation from chronic losses cannot be so easily mitigated. For comparison, the table below shows the saturation air activation[3] for the 500 MeV cyclotron at 200 μA average current. The vault ventilation rate, an air exchange every 45 minutes, results in releases of the short-lived positron emitters (C-11, N-13, and O-15) corresponding to 1% of the derived release limit (DRL) for the site. The regulatory limit for operation of a nuclear facility is 5% DRL. The table also shows the values per kW for the electron linac. To limit the increase in air activation to less than double current site emissions, the chronic losses for the e-linac and electron beamline would need to be limited to 5 kW (≈1μA/metre) or less.

Saturation Air Activation Concentrations		
	500 MeV cyclotron	50 MeV e-Linac
Radionuclide	Bq/m^3	Bq/m^3-kW
H-3	8.0×10^5	5.5×10^3
Be-7	2.7×10^5	8.5×10^2
C-11	5.3×10^5	8.5×10^3
N-13	2.7×10^5	8.5×10^4
O-15	2.1×10^5	4.3×10^4

Activation of Accelerator Components

The production of energetic neutrons is significantly less for a 50 MeV electronic shower than for a spallation reaction of a 500 MeV proton. Most of the photo-neutrons from the shower come from excitation of the giant dipole resonance, producing neutrons of energy less than 5 MeV. The neutron yield on an intermediate mass target, such as Cu, is 1×10^{12}/kW-sec for 50 MeV electrons as compared to 2×10^{13}/kW-sec for 500 MeV protons. Correcting as well for the smaller activation yield for the lower energy neutrons, means that e-linac losses of 100 watts/meter (2μA/meter @ 50 MeV) can be tolerated and still maintain permissible dose rates for hands-on maintenance. Over a total length of 50 meters, this would amount to 5 kW.

Radiation Safety System

The Radiation Safety System for the e-linac will consist of two subsystems: an Access Control System (ACS) to keep people away from the high-radiation fields inside shielding that are expected during normal operation, and a Radiation Monitoring System (RMS) to measure dose rates outside shielding and

3 The released quantities for tritium and ^{7}Be are significantly less than the saturation values, $< 1 \times 10^{-4}$, as the equilibrium concentrations for these long half-life species never have a chance to build up to saturation.

terminate facility operation if they rise above acceptable 10 μSv/h levels. As noted above, the RMS is based on neutron monitoring. The ACS will use standard features that TRIUMF incorporates in all areas where dose rates inside shielding can be high.

Machine Protection System

The machine protection system is designed to keep chronic beam losses below a few μA total and below 1 mA/m, as is consistent with maintenance and minimized air activation, and to prevent catastrophic loss of the full beam.

At full power, the electron beam is capable of melting engineering metals in a few milliseconds and of producing temperature rises capable of opening vacuum seals, etc., in a few hundred microseconds. The "charge" to machine protection has two components: (1) inhibit catastrophic events such as loss of the full beam, and (2) monitor chronic low-level beam losses and, by suitable interventions, reduce them to a level consistent with hands-on maintenance (a few μA total). The philosophy here is not to respond to catastrophic loss but to prevent it. In fact, machine protection reduces to a single imperative: keep the chronic loss below 1 μA and respond to incremental beam loss of ≈ 1μA within about 100 μs. A system which trips-off the linac at losses of 1 μA, will also trip at losses of 10 mA, and, of course, if beam loss of 10 μA is detected, you do not wait for it to rise to rise to 1 mA before taking action.

Machine protection will be implemented by two strategies: (1) monitoring of equipment conditions with a refresh rate of about 100 Hz, and (2) direct monitoring of beam loss with a response time of 100 μs or less. Interlocks for valves, magnets, RF, temperatures, coolant flow etc., are monitored for "out of acceptable range" conditions to terminate facility operation should potentially unsafe configurations occur. Beam losses can be measured directly with DC current transformers on a time-scale of 100 μs with a precision of 10 μA in 10 mA, and two such devices are installed in the beam line. To achieve faster response and lower the resolution to < 1μA, one must measure the complement of beam loss: beam appearance in a suitable particle detector. For example, the e-linac vault and beam line could be instrumented with a series of photomultiplier tubes housed in light-proof boxes. Losses greater than 1 μA anywhere along the linac or beam lines will trip off the electron beam, with the conclusion that total losses cannot exceed a few μA and average levels would be much below 1 μA/m.

Fourth-Generation Light Sources

Introduction

The e-linac stands on its own merits as a photo-fission driver for nuclear physics and materials science and enjoys strong connections to SRF accelerator projects worldwide, connections which are advantageous to the HEP community. Nevertheless, it is tempting to point out that e-linac, potentially also has connections to the next generation of light sources, connections that could be explored in the far future with incremental expenditures but large benefits.

Third-generation electron-synchrotron light sources, such as the Canadian Light Source, have become part of the key national scientific infrastructure of most developed countries. The research using these beams has expanded from

initial applications in materials research and physical chemistry to almost all areas of science, including biology, geology, agriculture, archaeology, and medicine. These synchrotron-based facilities provide multiple photon beams with high flux and brightness from the far infrared to hard X-rays. At both ends of this spectrum, a case may be made for investigating linac-based sources.

Hard X-rays

Most of the recent third-generation sources have an operating energy of about 3 GeV, which is the optimum energy for maximizing the range of scientific research at the facility. A consequence of this choice is that the maximum useful X-ray energy from a bending magnet source is about 30 keV. X-ray energies up to 100 keV are available using high-field wiggler magnets, but the high average power in the X-ray beam (up to 25 kW) presents significant technical challenges to X-ray optical components. Light sources with 6 to 8 GeV electron energy (ESRF, APS, and SPRING-8) can produce these higher energy X-ray beams much more easily, but each of these facilities costs a billion dollars. FELs are even more expensive for achieving a specific X-ray energy. The LCLS at Stanford and XFEL at DESY both will produce X-rays of about 12 keV with a brightness 10^{10} times higher than ring-based sources, but at a capital cost up to a quarter-billion dollars.

Thus, it is interesting to explore other possible techniques to produce X-rays with sufficient flux and brightness to do interesting research or exploit potential industrial or medical applications, but which have substantially lower costs especially for higher X-ray energy and/or short X-ray pulse lengths. One attractive approach is the Compton scattering source (CSS), which capitalizes upon the immense performance increases in lasers that have also been developed over the past two to three decades.

Compton Scattering Source

The concept of CSS is based on the scattering of photons from an intense laser by a relativistic electron beam. Using the laser as an effective undulator with a much shorter period than the commonly used magnetic undulators in synchrotron light sources, a much less energetic electron beam can be used. Proof of principle has been demonstrated at Duke University, UCLA, Lawrence Livermore National Laboratory, Brookhaven National Laboratory, Frascati, and other CCS are under development at MIT, the University of Tokyo, and the University of Hawaii.

Photons, which are backscattered in head-on collisions with the electron beam, are Doppler-upshifted in energy by a factor of $4\gamma^2$. Consequently, the combination of a modest 75 MeV, 1 mA electron linac and a modern table-top pulsed laser system with ≈1 eV photons could produce X-rays up to 90 keV. However, the scattering cross section, 6.7×10^{-29} m^2, is very small. To get reasonable flux from the collisions, the peak electron current (typically 1 nC in a sub-picosecond bunch), and the peak photon flux (at least 1 J in a few picosecond-long pulse) must be very high, and the cross section (10 μm^2) of both beams must be small at the collision point.

These conditions present significant technical challenges that any design for a CSS must address. A non-exhaustive list of R&D would include:

- photo-cathode intense pulsed electron sources;

- high-quality electron linacs;
- electron pulse compression;
- focusing both laser and electron beam to required spot size;
- stability of electron and laser beam at interaction region;
- reproducibility of electron and laser beam pulses;
- electron and photon beam diagnostics; and
- X-ray beam optics tailored to CSS characteristics.

Retro-fitted with a photo-cathode electron gun, piezo controllers, and equipped with a bunch-compression magnet chicane and low-beta beam optics insertion, and run at reduced duty factor, the e-linac provides a 100 MeV capable electron source for this R&D effort.

Applications of CCS

Applications of the CSS technology are currently emerging [Proc. Synchrotron Radiation Instrumentation (SRI2007), Baton Rouge, Louisiana, 25-27 April 2007]. Various groups (MXISystems, Lyncean Technology, MIT, and so on) are advocating these sources for monochromatic X-ray therapy of cancers. Because these sources have a much narrower X-ray spectrum than conventional hospital-based sources, there is increased lethality for the tumour cells. Other medical applications include high-contrast, low-dose diagnostic examinations, such as low-dose 3-D mammography; and a new kind of radiation therapy for cancers called Auger Cascade Radiotherapy, for example the treatment with iodine-125 (or I-127) of the thyroid.

Current third-generation light sources are exploring potential applications of hard X-rays to novel biological and medical imaging techniques, such as K-edge subtraction and diffraction enhanced imaging, which require high X-ray energy for adequate penetration of large biological samples. CSS also opens up experiments at X-ray energies above 100 keV that are not currently available at most third-generation facilities. The potential applications include nuclear fluorescence spectroscopy and isotopic imaging, time-resolved positron annihilation spectroscopy, and MeV flash radiography.

Infrared Radiation

For narrow band studies, the IR FEL is in competition with relatively conventional tabletop lasers. However, the wide range tunability and scanability, particularly in the far IR, favours the FEL. The FEL is easily tuned, for example by simply changing the beam energy or the undulator field strength over an energy range which, by the standards of conventional lasers, is extraordinarily wide. The FEL source has other capabilities beyond those of current tabletop IR lasers, particularly in terms of its ten times higher power and its long wavelength capability extending to THz.

The high power opens the door to image resolution below the diffraction limit. The so-called near-field microscopy relies on exponentially decaying evanescent waves, and so high-brilliance illumination is essential. With high-power also comes the ability to collect sufficient photons to produce an image in so-called time-resolved microscopy with very short illumination pulses. In

combination with other radiation sources, the IR FEL offers fascinating possibilities, for example, two-colour experiments and pump and probe experiments. Whereas the third-generation synchrotron light sources provide the means to determine structure with high precision, these fourth-generation tools enable us to understand how these structures work.

IR FEL

Configured as a 20 mA × 70 MeV ERL by the addition of return arcs and boosted cryogenic capacity, and coupled to a suitable high-Q cavity FEL, the e-linac could produce hundred-watt-levels of infrared radiation in the range 2–200 μm (near IR to far IR). The superconducting RF-linac offers the advantage of highly stable operation and high average power. Applications of IR FELs are starting to become mature, and we have selected two examples that exploit the photon-power advantage.

Near-Field Microscopy

Near-field microscopy is rapidly evolving from a novel technique to a powerful instrument for the nano-imaging of materials and biological systems. The use of IR FELs is an important ingredient in this evolution. For example, collaborators at EPFL, Switzerland, ISM-CNR, Italy, and Vanderbilt University, USA, have created "spectroscopic" images of microcircuits with resolution beyond the diffraction limit. In another example, researchers from ISM-CNR, Italy and Vanderbilt have used scanning near-field techniques to analyze the distribution of functional groups in a single cell with a resolution of 100 nm for spectroscopic images and 50 nm for topographic images, which corresponds to ≈ 1/60 of the diffraction-limited resolution.

Materials Processing

The Thomas-Jefferson National Accelerator Facility (JLab) IR FEL provides two examples of materials processing. Carbon nano-tubes are increasingly utilized in various technologies. Current commercial applications include motor vehicle fuel system components and specialized sports equipment. Worldwide demand is currently a few metric tones/year, while current production techniques produce about 0.2 gm/hr. Using the IR Demo FEL and delivering an average power of 300 W onto the target, researchers obtained yields of 1.5 gm/hr.

Functional or smart surfaces and coatings play an increasingly decisive role for the applicability and performance of all modern materials. An example that is familiar to many is the application of titanium nitride (TiN) on tool bits. TiN is also used to improve the biocompatibility and wear characteristics of replacement joints. University of Gottingen researchers have used the IR FEL for the nitriding of Ti metal. Compared to other types of laser nitrided Ti, the FEL-produced material had a thicker and harder coating, due to the formation of oriented dendrites.

Terahertz Radiation

Electromagnetic radiation in the frequency range from 0.3 to 20 THz, sometimes called the THz gap, is a frontier area for research in the physical sciences, biology and medicine. Terahertz sources of high quality and high

average power are scarce, and as a result the community of users is presently much smaller than the potential based on scientific opportunities. Accelerator-based sources of THz radiation with high peak and average power will illuminate new realms. Here we focus on two classes of experiments that require characteristics which can be delivered by linac-based THz sources, either Free Electron Lasers (FEL) or Coherent Synchrotron Radiation (CSR) sources. In FELS, the wavelength is related to the wiggler period; whereas for CSR produced in a bending magnet, the radiation occurs on the scale of the bunch length which must be exceedingly short.

Narrow-Band THz Radiation

A typical FEL source is composed of a single-pass 10–50 MeV electron linac (NC or SRF) driving a wiggler placed inside an optical cavity. There are three FEL user facilities of this type operating in the THz gap: FELIX in the Netherlands, the Stanford Subpicosecond FEL Center, and the University of California at Santa Barbara (UCSB) FELs. Research at the latter emphasizes how the properties of semiconductors can be manipulated by the application of strong THz fields. The Stanford FELs are driven by an SRF linac and, as a result of the lower RF losses, are capable of 10^3 times higher macropulse durations than an NC facility such as FELIX. Compact CSR sources in this regime have so far been proof-of-principle experiments, but they have great potential and are being actively explored.

Broad-Band THz Radiation

Other experiments require coherent half- or few-cycle THz pulses of high peak and average power which enable applications in the areas of high-field physics and ultrafast (50 fs) time-domain experiments, usually performed using a "pump-probe" technique. These experiments require tunable (0.1 to 50 THz), ultrafast THz pulses, with synchronized ultrafast pulses from mid-IR to X-rays.

The NSLS/SDL at BNL is an example of an NC linac-based THz source, while the JLab FEL is an SRF-driven FEL and THz user facility that produces half-cycle THz light. Experiments at BESSY have produced stable CSR in a storage ring, while experiments at LBNL-ALS have demonstrated intense THz CSR pulses from laser-slicing. In all cases, THz radiation is produced through CSR. To produce a single or half-cycle coherent THz pulse, the entire electron bunch must be short (<1 ps). Linacs using photo-cathode electron guns offer distinct advantages with respect to production of high brilliance and short pulse electron beams, and intrinsic synchronization of an ultrafast laser to the electron beam. Furthermore, SRF linacs allow operation at high repetition frequency, resulting in up to kilowatts average power of THz radiation. Finally, linac-based sources offer flexibility in their mode of operation.

A 10–20 MeV e-linac is sufficient to produce THz radiation. With a number of modifications, the e-linac could be configured as a THz radiation source: either FEL-based similar to FELIX, or CSR-based similar to the JLab THz facility.

User Community

The Canadian community of laser and synchrotron light sources is a diverse group conducting research at home and abroad. Presently, this community is

engaged in exploiting, to maximum potential, the existing facilities, including the CLS at Saskatoon. For the next few years, it is believed that improvements in instrumentation, automation, and detector technology will be a more cost-effective investment than new accelerator infrastructure. Moreover, the concepts presented here are entirely complementary to the CLS in their parameter reach and scientific possibilities.

Against this argument serving the *status quo*, must be set the enthusiasm of the wider community for alternative accelerator-based sources. For example, there are numerous FEL user facilities: six operational in the United States, six in Europe, and two in Japan [www.lightsource.org]. In addition, there are about 30 research machines and 24 other FELs proposed [Colson, Blau, Kampouridis, Proc. of FEL 2006, BESSY, Berlin, Germany]. The fourth-generation sources offer exciting new reach for the physical and biological sciences. Enthusiasm for them in Canada should be expected to grow, and they should be part of the ten-year horizon. Indeed, it is CLS personnel who have proposed a Canadian initiative to develop CCS-based hard X-ray sources, and any development at TRIUMF would have to rely on strong collaboration with CLS scientists.

With marginal incremental investments, e-linac could serve as a testbed for CCS technologies or a staging post to an IR or THz FEL or CSR source. E-linac provides a source of future possibility and opportunity to broaden light-source based research in Canada. For those reasons, we have gone to some pains to assure that e-linac is inclusive of those future options: no decisions made in the e-line design will preclude diversification of the facility to a demonstrator of fourth-generation light source technology.

Conclusion

The e-linac promotes access to some exciting science by allowing high yields of certain neutron-rich species with lower isobar contamination. These neutron-rich rare isotopes are a niche region and complement the proton-rich rare isotope program. E-linac can also be used to expand the β-NMR program and explore the production of novel medical isotopes. As illustrated, this “driver” is new for TRIUMF and will hone the skills of Canada’s accelerator community and open future windows of discovery. The choice of L-band SRF technology will develop a new core competency and make Canadian industry one of only 5 in the world able to do this type of work. In the longer-term, the science and technology of the e-linac positions TRIUMF well for advanced accelerator R&D involvement on the world’s next global science project, the ILC which truly works at the edge of technology. Finally, this project will grow domestic expertise in 4th generation light source technology.

6.2.1.2.3

Conceptual Design of New Target Station

The development of ISAC into a multi-beam facility requires that TRIUMF build a new independent target station that will accept either protons from a new cyclotron beam line or electrons from the new linear accelerator. For future expandability, it is desirable to leave open the option of subsequently installing an additional target station. These new stations, combined with the existing ISAC target station, will allow TRIUMF to deliver, simultaneously, initially two, and subsequently, with the additional target station, three, rare-isotope beams (RIBs) to ISAC users. This capability will allow TRIUMF to triple its scientific output. The new target station will be compatible with operating actinide targets using a proton beam at 500 MeV or an electron beam at 50 MeV for photo-fission. It will employ a modular approach similar to that used for the present ISAC target stations. An entrance module will be equipped with diagnostics for the incident beam. A target module will be equipped with a hermetic containment box that will house the target/ion source assembly. A beam dump module adjacent to the target module will stop the incident beam. Two exit modules will contain the optics to prepare the heavy ion beams for the mass separator.

After analysis of the present ISAC target station operation, we found that the major drawback is the non-hermetic sealing of the target box; this represents a risk of contamination and makes operation of air sensitive material such as

uranium carbide a potential hazard. The second issue is the fact that the mechanical and electrical services have to be connected and disconnected manually, which creates delays for the target exchange. In the new ISAC design, we will address these issues by having a completely hermetic containment box that will house the target/ion source assembly. The new ISAC target modules will be equipped with a hermetically sealed containment box, and the services will be provided remotely. Considering that in this configuration we will be able to condition a fresh target on the test stand in advance and have it ready for on-line operation, we could change targets within two days instead of the three to four weeks presently required.

Two new hot cells are also proposed. One hot cell will be instrumented specifically for target/ion source assembly and exchange, while the second one will be used for maintenance and repair.

Exotic Beam Production with Protons

Protons at high energy ($E \sim 500$ MeV) incident on a high Z thick target are used to produce rare isotopes. There are three principal reaction mechanisms taking place: spallation, fission, and target fragmentation.

Spallation Reaction

This mechanism is a two-step reaction, which involves protons at 500 MeV interacting with high Z target material. The emission of charged residues follows the evaporation of neutrons. This reaction mechanism leads to a large mixture of different nuclei mainly situated on the neutron deficient side of the nuclear chart. The exoticity of the isotopes produced in this reaction mechanism is roughly proportional to the energy deposited during the nuclear interaction. The more energy deposited in the interaction, the more neutrons will eventually evaporate from the highly excited compound nucleus.

Target Fragmentation Reaction

Depending on the impact parameter and proton energy ($E > 400$ MeV), the incident particle breaks the target nucleus in two smaller residues, one close to target mass and the other a light nuclei. In this case, the energy deposited is not large, and the residues will subsequently evaporate a few neutrons. This mechanism produces neutron-rich rare isotopes. The neutron-to-proton ratio of the light fragment depends on the neutron-to-proton ratio of the target. Hence, if neutron-rich light fragments are required, it is desirable to use ^{238}U as the target material.

Fission Reaction

At relatively high incident energy, the fission mechanism produces a symmetric fission that creates a peak in isotope production in the medium-mass region. By going higher in proton energy, this symmetric peak becomes wider and eventually disappears around 3 GeV where the production is nearly flat for all residues.

With fissile target such as Th or U, there are asymmetric fission peaks on top of the products from the other reaction mechanisms. These fission peaks are induced either by secondary slow neutrons or by fast protons and neutrons. Together, the fission fragments will broaden the usual mass distribution toward the neutron-rich isotopes while the neutron deficient remains similar.

Exotic Beam Produced with Photo-Fission

An electron linear collider (e-linac) is proposed at TRIUMF as a test bench for the international linear collider (ILC) initiative. TRIUMF wants to acquire the high frequency 1.3 GHz super-conducting technology by building a 50 MeV electron machine. This e-linac can be used to produce exotic nuclear ion beams via the photo-fission of the ^{238}U nucleus. This process was proposed by Diamond as a means to produce RIB and expanded on by Oganessian in the late 1990s [W. T. Diamond, Nucl. Instrum. and Methods V 432, 471, (1999) and Y.T. Oganessian, Nucl. Phys. A 701, 87 (2002)]. The fission is typically induced by electron beam interacting with a fissile nucleus. The photo-fission threshold is 5.4 MeV. Furthermore, the excitation of the giant dipole resonance yields a large fission probability, 160 mb around 15 MeV. The energy range of the atoms produced by the GDR is between 10 and 20 MeV [J. T. Caldwell, *et al.*, Phys. Rev. C21, 1215 (1980)]. For large electron beam powers, it is not practical to impinge the electrons directly onto a thick U target. It is preferable to use a converter that produces photons by braking radiation (bremmstrahlung). The photon energy distribution is a continuous spectra from zero to the maximum energy of the electron. The optimum energy for the electrons to produce photo fission is approximately 50 MeV.

The bremstrahlung photons are emitted in a sharp cone around the electron direction. Taking into account the angular dispersion of the electron with respect to the original direction and the photon cone angle, one can calculate the number of photons that will interact with the target. The result is the convolution of the two processes. Once we have the distribution of the photon with respect to its energy we can find the number of photo-fissions by integrating the braking radiation spectrum and the giant dipole resonance cross section.

It is important to take into account the fact that high-energy photons ($E_\gamma > 5$ MeV) are easily converted into electron-position pairs. This process will attenuate the photon intensity, and the resulting effect will be a lower yield. A Monte Carlo simulation shows that we can expect a photo-fission rate of around 4.6×10^{13} /s. The release mechanisms of the RIB from the target are similar to those for proton production. To optimise RIB rates, the same type of development as proton-irradiated targets will be required.

ISOL Method: Release Mechanisms and Processes

Once the incident particle (proton or electron/photon) interacts with the target nucleus, the reaction products are stopped in the bulk of the target. To reach the ion source where an ion beam can be formed, these atoms have to undergo two release processes, the diffusion and the effusion, respectively. The rare iso-

topes form atoms that have to diffuse to the surface of the granule or foil. Then they have to undergo absorption de-sorption from the surface every time they collide with the walls of the target container, *i.e.*, effusion process.

In this method, if we want to produce beams of very short-lived elements, the release process has to be very fast. A rapid release of the reaction products embedded in the target material implies that the diffusion process brings the desired element to the surface, The diffusion rate in solids can be obtained by solving the Fick's equation for the diffusion. The key parameters driving this process are: the operating temperature, the size of the granule or crystal composing the target (d), the activation energy for the diffusion into the target material (E_A), and the self-diffusion parameter (D_0).

Parameters D_0 and E_A depend on the element of interest and the target material. The major role of the development of new exotic nuclear beams is to find the best target material for the specific beam. Operating at high proton intensity can significantly change this picture. At ISAC, we observed a non- linear increase of the RIB intensity with the incoming proton beam intensity. This can be related to the fact that, at high power density, the number of voids created by the incident proton beam in the crystal lattice increases faster than the repair mechanisms or self-annealing process. Since the impurities will migrate preferentially toward those voids, the increase in concentration will speed the diffusion process. For ^{11}Li and ^{21}Na, we can observe that the diffusion is enhanced and the yield is non-linear. In fact, the diffusion goes with the square of the proton beam intensity. Because of this process, we are less and less limited by the diffusion process if we can operate ISAC at proton beam intensity larger than 50 μA and with a beam spot of the order of 4 mm FWHM on target [M. Dombsky *et al.*, Nucl. Instr. and Meth. B204 (203) p. 191].

The second release mechanism deals with the surface desorption and subsequent effusion from place to place until the atom reaches the ion source. Once the atom has reached the surface of the target granule or foil, it has to gain enough energy to overcome the surface desorption enthalpy of the material or of any other surface material encountered on its way to the ion source. The release efficiency for pure effusion depends on the mean number of collisions with the surface of the target material and the target container before leaving the enclosure. The sticking time t_0 per collision, which depends essentially on the temperature of the crystal and on the absorption enthalpy ΔH_a of the surface in the enclosure:

$$p_\nu(t) = \nu e^{-\nu t}$$

and the mean free flight time t_f between two wall collisions. The profile is given by:

$$\frac{1}{\nu} = t_\nu^{delay} = x_c(t + t_f)$$

where,

$$t = t_0 e^{-\Delta H_\alpha / kT}$$

and t_0 can be related to the lattice vibration frequency; the higher temperature, the smaller this term will be. From these equations, we can see that the limiting factor is the time the atom sticks to the surface of the enclosure and the absorp-

tion enthalpy. If the absorption enthalpy is large, there will be huge decay losses. This means the atoms will decay before they can reach the ion source. When dealing with effusion-limited release, it is important to limit the number of wall collisions. This implies a need for a small volume target container.

Refractory elements, even if long-lived, are not released from target material even at the highest operating temperature because most of the time this is due to chemical affinity between the refractory species and the target material or target container. If the element of interest makes alloys or compounds that are even more refractory than the target material, the release will be very inefficient. To overcome these difficulties, we can inject a gas that will react with the element of interest and the resulting compound will be volatile. Several groups have successfully used the high volatility combined with the thermodynamic stability of the metal chlorides or fluorides [U. Köster, *et al,* European Physics Journal, V 150, 285 (2007)]. Unfortunately, with the non-hermetic containment box of the present ISAC target module, it is not advisable to use this method. The risk of contamination during transport from the target station to the hot cell is too large.

And, finally, once the atoms have effused from the target to the transfer tube that connects the target volume to the ion source, they must be ionized and extracted to form an ion beam. The importance of the ion source cannot be neglected in the isotope separation on-line (ISOL) method; an inappropriately designed ion source may not produce the intensity we want even though the initial production of the required isotope in the target is significant.

Target and Ion Sources Development

Experience at the operational ISOL facility clearly shows that there is not a universal target/ion source combination for the production of all required isotopes for the physics program. Thus, several types of ion sources are required at the ISAC facility. The initial TRIUMF-ISAC target module design was done with this idea in mind, and flexibility has been provided in the system to allow their successful implementation. This flexibility has been retained in the new target station design. To maximize the yield of a desired species, we have to reduce the transmission losses. This means that the ion source has to be closely coupled to the target oven. This fact has enormous implications on ion sources. The hostile environment also dictates that the ion source be both simple and small for sake of economy and to minimize surface area in order to avoid decay losses.

Target Ion/Source Assembly

The target module houses an assembly comprising both the target container and ion source. This assembly is changed on a regular basis, every three to five weeks on average to satisfy the requirement from the scheduled physics program. In addition to the target container, transfer tube and ion source, the assembly includes an oven to heat the target material, an extraction electrode, beam-optics correction bender, and the ground electrode.

The ISAC Target Stations

The present two ISAC target stations have been in operation for a good number of years. Each comprises five modules that house the primary beam diagnostics (entrance module), the target/ion-source assembly (target module), the beam dump (dump module), and the optics for beam matching for the mass separator (exit modules 1 and 2). Each module has a service cap, a service duct, and a containment box housing functional components (target/ion source, optics, or beam dump). These five modules are inserted into a large vacuum box. Differential pumping avoids collapse of the containment box and limits the spread of the contamination from one vacuum entity to the other. In this design, the regions requiring the use of radiation-hard materials are limited by shielding and distance.

The proposed new ISAC target stations are designed based on lessons learned from the operation of the existing ISAC target station concept. Three advantageous features of the modular design have been borne out in practice:

1. The non-radiation resistant components, such as O-rings, turbo pumps, actuator, and cable insulators, are protected by the module-shielding plug. This allows maintenance-free operation at the specified proton beam intensity of 100 μA.
2. The dose to staff is kept to a minimum.
3. The two stage mass separator concept, a pre-separator combined with a high-resolution separator, satisfactorily limits the contamination spread through the ISAC beam lines.

Routine operation has also revealed the following areas for improvement in the design:

1. The target box housing the target/ion source assembly is not hermetically sealed.
2. Thus, the transfer of the spent target from the target station to the hot cell is done in the open atmosphere of the target building. This introduces a risk of volatile radioactive gas or dust escaping the target box during transfer from the target station to the hot cell. The open configuration of the target box also means that vacuum and high-voltage conditioning must be done *in situ*, once the new target module is installed in the station. This takes an additional one to two weeks depending on the target material and extraction voltage.
3. All mechanical and electrical services for the target/ion source assembly are connected and disconnected by hand. The required cool down period for access to the service cap to undertake these operations is presently one week.
4. Since the target change time is about three or four weeks, the target/ion source system in the other target location has to remain operational for the same period to avoid beam time loss. This is quite demanding on target assemblies when running at high proton beam intensity. Radiation damage is clearly visible; in post-mortem inspections, we can see cracks developing on the target container. This damage is not merely superficial, it also manifests itself as degrada-

tion in exotic ion yield. Optimizing scientific output requires that we run our targets for shorter periods. In turn, this requires faster target module turn around. Figure 1 shows the sequence to change a target/ion source assembly.

5. In the present ISAC pre-separator, the focal plane slits and the laser window port require manual maintenance and replacement. The dose rates for these operations are quite large. This is especially problematic for regular cleaning of the laser window port on the pre-separator magnet vacuum chamber.

New ISAC Target Station Specification

To address the issues mentioned above, the new ISAC target station design will implement a hermetically sealed containment box on the target module and on the two exit modules.

A sealed containment box on the target module virtually eliminates the risk of contamination spread, allows the use of air-sensitive target materials, and provides the ability to pre-condition the module. On this last point, target/ion source assemblies in this new design undergo vacuum and high-voltage conditioning off-line prior to installation, so that they may receive primary beam immediately after installation. This modification will address deficiencies 1 to 3 listed above. To address the other issues, which are related to personnel radiation dose, we will have remote connect and disconnect of the target/ion source services. This feature will eliminate the need for cool down time before

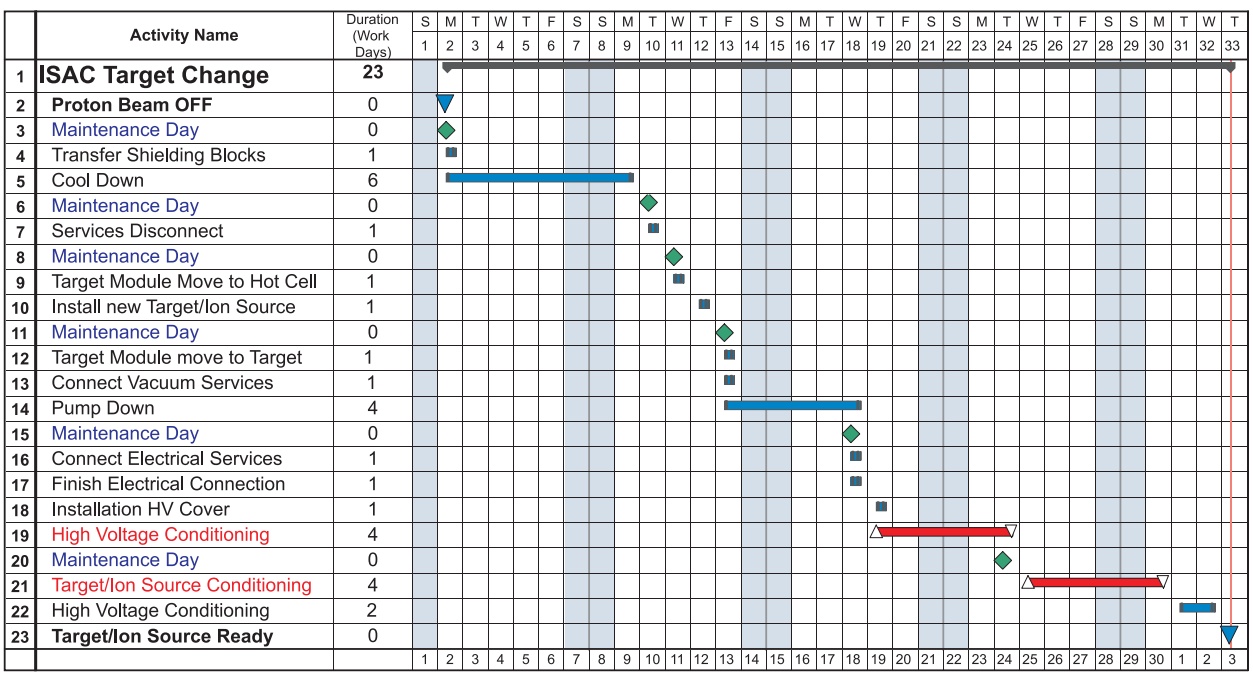

Figure 1: The target/ion source exchange sequence. This shows that each new target/ion source assembly takes about four weeks before it becomes operational. The main issue is the fact that the target/ion source conditioning and high voltage conditioning has to be done *in situ.*

removing the target to the hot-cell. With these modifications to design and operating procedures, we will be able to change a used, spent target with a fresh, ready-to-run target in two days (see Figure 2).

To accomplish this task, we will need to develop an all-metal seal system that connects the containment boxes, target, and exit module. Each containment box will be equipped with all-metal radiation resistant gate valves. The VAT® company offers a DN250 all-metal gate valve with a compact actuator that is suitable for this application. The connection between the containment boxes will be made with an all-metal C-seal joint.

The remote handling crane coverage in the new ISAC target hall will include the pre-separator slits (object and image) and the laser mirror, which includes the entrance laser window. A similar all-metal-seal system will be used to satisfy the remote services.

Hot Cells

The new ISAC target facilities will include two new hot cells. One hot cell will be fitted with specialized instruments for the target/ion source assembly exchange, and a second will be fitted with general-purpose equipment primarily for maintenance and repair.

The target/ion source assembly exchange hot cell prerequisites are:

1. Rapid target exchange turnaround,
2. High target exchange reliability,
3. Improved contamination control, and
4. Efficient module transfer.

To achieve a rapid target turn around, target/ion source conditioning will be done before the new assembly is installed for on-line beam production. The target/ion source assembly will be maintained under vacuum or control atmosphere so that it remains ready to receive beam. Because this hot cell will be specialized to perform only the target/ion source exchange, it will be specifically designed to limit the exposure of the module to the target contamination

	Activity Name	Duration (Work Days)	Sunday 1	Monday 2	Tuesday 3	Wednesday 4	Thursday 5	Friday 6
1	**New ISAC Target Change Sequence**	**2.00**						
2	**Proton Beam OFF**	0.00						
3	Maintenance Day	2.00						
4	Remove Shielding Blocks	0.50						
5	Disconnect Services	0.12						
6	Target Module Move to Hot Cell	0.50						
7	New Target Module Move to Target Station	0.50						
8	Connect Services	0.12						
9	Replace Shielding Blocks	0.25						
10	**Target/Ion Source Ready**	0.00						

Figure 2: Target/ion source exchange sequence for the new ISAC target station.

volume. The module exterior will be isolated from the target containment volume. The hot cell will have a sealed transfer portal for target/ion source assemblies and tools. Spent target/ion source assemblies will be transferred directly to a shipping containment vessel.

The second hot cell will be more universal and dedicated to maintenance and repair of the modules, diagnostics, etc., and we see it being similar to the existing one; we anticipate adding a decontamination facility into this hot cell.

Target/Ion Source Conditioning Station

The present ISAC target/ion source assembly is not ready for beam when it is installed in the target station. Since it is exposed to air during the transfer into the station, it must then be baked, pumped, and high-voltage conditioned prior to receiving primary beam. To essentially eliminate this conditioning time, we will build a separate, off-line conditioning station for the new ISAC target/ion source assemblies. Preferably, this station will be equipped with a mass separator (R ~1000 for $\varepsilon \sim 10\ \pi$ mm mrad at 50 keV) for a complete evaluation of the new target/ion source assembly before on-line operation. Once the fresh target/ion source assembly is ready, it can be stored under vacuum while waiting to go on-line. The conditioning sequence is shown in Figure 3.

New Proton Beam Dump

At present, we are routinely operating the H^- cyclotron at 245 μA. For all existing facilities to operate at full capacity, the cyclotron would have to deliver 350 μA. The limitation on demonstrating an average current in excess of 295 μA has been a shortage of beam dump capacity. A beam dump capable of 200 μA is required to be able to develop the high cyclotron beam intensity required for operating all the targets simultaneously at full intensity. We are thus planning to install a new beam dump at the end of the new BL4N capable of 200 μA at 500 MeV (see Figure 4).

RIB Development at the New Target Station

Development of new exotic beams is essential for successful scientific exploitation of ISAC. Most of the scientifically interesting beams are created in very small amounts and require the full intensity beam. In general, each new element requires a different target material and optimum target design. Fur-

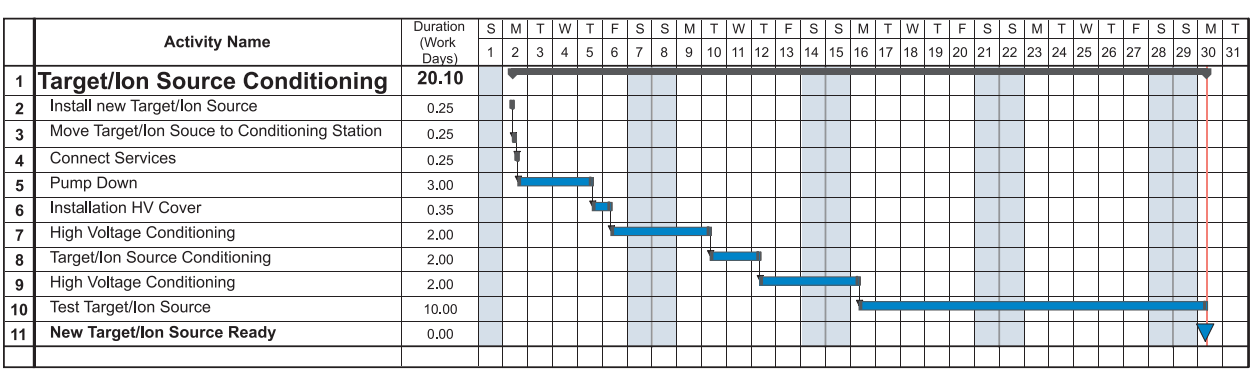

Figure 3: Target/ion source conditioning sequence in order to have a target ready for beam.

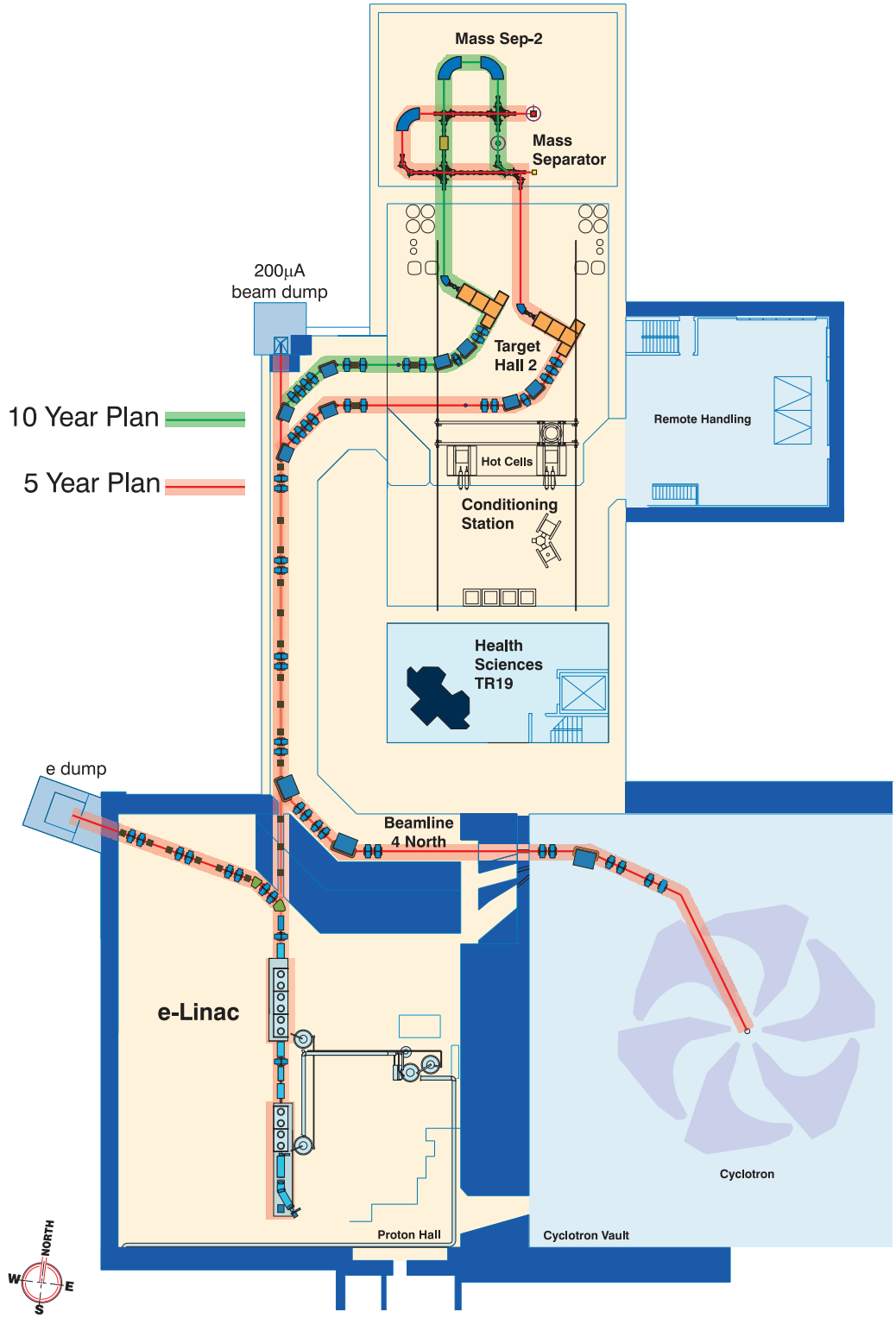

Figure 4: Plan view of the proposed layout to accommodate the new e-linac (to the right hand side of the cyclotron), two new target stations and their associated front-end optics, mass separator, and vertical section that will bring the RIB to the experiments.

thermore, many different types of ion sources are needed to cover the periodic table. As such, target and ion source development is an essential task in any ISOL facility and must be actively pursued at ISAC to ensure a successful long-term scientific program.

At the present time, ISAC has only one beam line (BL2A) for the transport of protons from the TRIUMF cyclotron to the target and two target stations (designated East and West). With careful scheduling of the two target stations, the actual interruption in isotope production can be kept to a minimum when beam production changes from an old target in one target station to a new pre-conditioned target in the other target station. However, for a given target station, each target change requires about a three to four week turn around from "beam off" to "beam on." Target development and on-line ion source development are not directly compatible with RIB delivery operation and are difficult to schedule with the long changeover times between targets. This has created the situation where about 25% of potential proton beam time is not available for scientific experiments while essential new targets are being developed. With the faster target changes at the new target station, target development can more easily be scheduled, and time wasted on resulting target changes significantly reduced. We foresee that by increasing these efficiencies as well as the number of targets operating at the TRIUMF-ISAC facility, by 2020 target development time will drop in percentage terms to about 12.5% while the available time for target development will increase from about 650 hrs/year to 1500 hrs/year.

Shielding Considerations for the New ISAC Target Station

The shielding for the new ISAC target station will be similar to what is in place for the existing ISAC target stations, because the proton beam energy and the maximum beam current are the same. A combination of steel and concrete will be used as it is with the shielding for all high-energy proton targets and beam dumps. The steel provides effective attenuation and moderation of the neutron

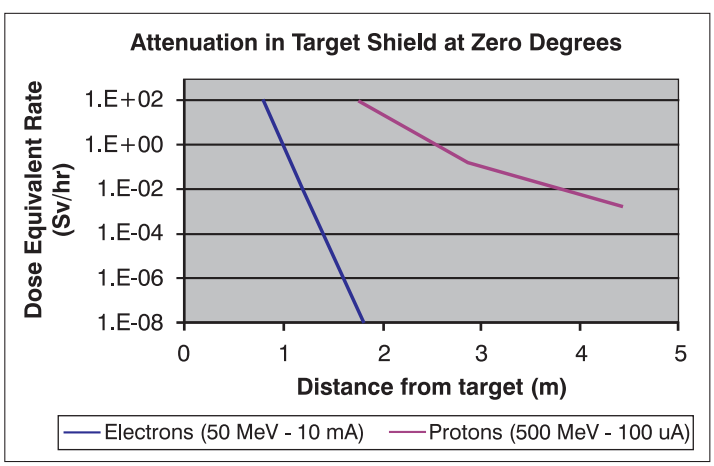

Figure 5: A comparison of the attenuation for a 500 MeV, 100 μA proton beam and a 50 MeV, 10mA electron beam at zero degrees.

energy down to a few MeV. Below that energy, elastic scattering dominates, and the lighter mass concrete is effective in providing attenuation. The shield transmission has been estimated using the Moyer model. The attenuation for a 500 MeV, 100 μA proton beams at zero degrees is shown in Figure 5. The change in the effective attenuation length from the inner steel shield to the outer concrete is seen at a target distance of about three meters.

Also included in the figure is the attenuation of the steel and concrete shielding for the bremsstrahlung production from a 50 MeV, 10 mA electron beam incident on a heavy production target at zero degrees. The energetic gammas will also give rise to neutrons from photonuclear reactions; however, the dose rate from these is two to three orders of magnitude less than that from the bremsstrahlung. Ultimately, it is the energetic neutrons from the high-energy proton beam that drives the requirements for the target shielding.

In addition, with the operation of actinide targets one can expect a potential maximum flux of fission neutrons of 1×10^{13} sec^{-1}. The outer layer of the target shield consists 1.2 to 1.5 metres of concrete. This thickness will be sufficient to moderate and attenuate the fission neutron spectrum to a dose rate of a few μSv/hr, in keeping with the TRIUMF limit for low occupancy areas.

Other considerations for the shielding will need to include:

- A reduction of the dose rate at the shield boundary to tens of mSv/hr to keep activation of the infill soil from the residual neutron flux well below

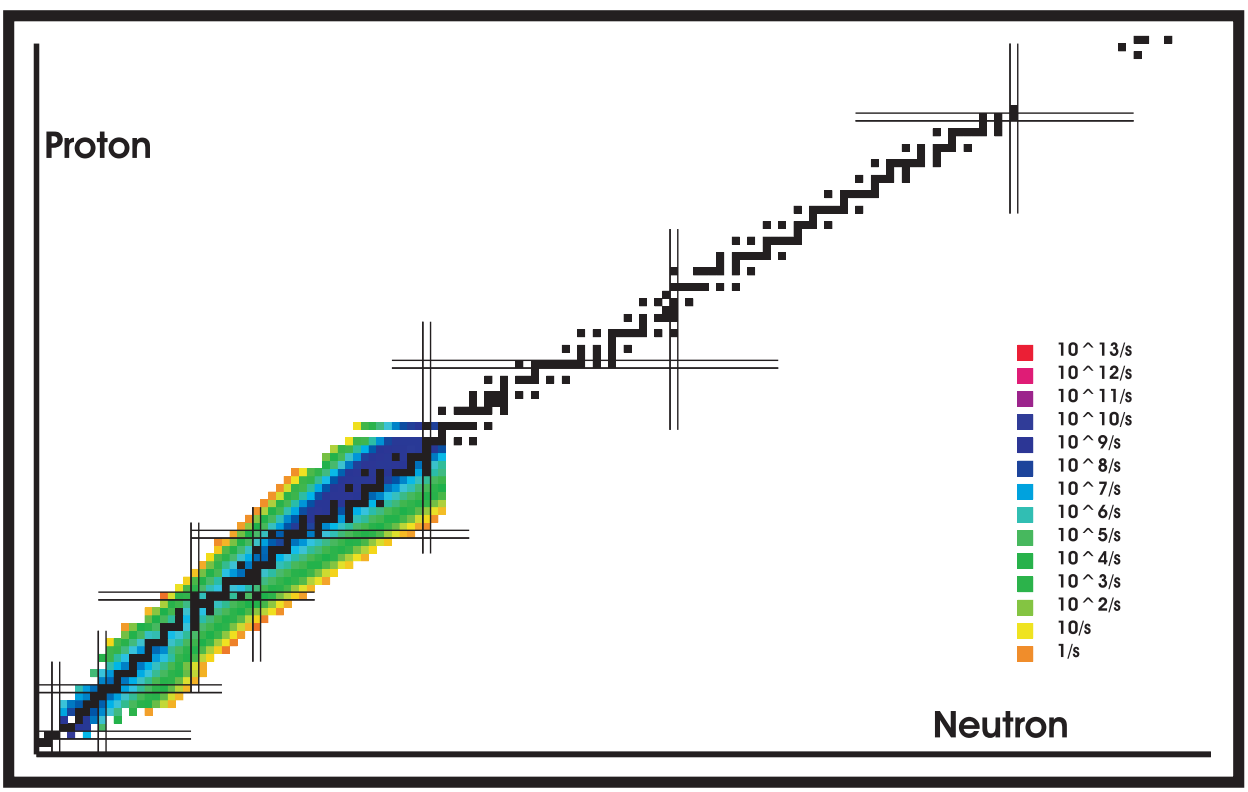

Figure 6: Production in target assuming 100 μA proton beam on a 10 g/cm^2 Nb foil target from Silverberg-Tsa parametrization.

the natural background activity in the soil.

- Hybrid steel and concrete blocks will need to be used above the target stations to effectively attenuate energetic neutrons streaming through the small solid angle of the service chase in the side of the target module.
- Use of low sodium concrete of approximately 0.06% by weight combined with the addition of boron carbide, approximately 0.2% by weight, to suppress the thermal neutron flux and, hence, the production of ^{24}Na in areas where personnel access.
- Prompt radiation fields in accessible areas will be kept below 10 μSv/hr and, ideally, the shielding will be designed to achieve 1 μSv/hr in these areas.
- Shielding for accessible areas in the proximity of the proton beam line will be adequate to keep dose rates below 1 μSv/hr in the event of an accidental loss of the full beam current. In addition, the area would be equipped with redundant Safety Critical Radiation Monitors to provide a fast shut-off for the proton beam and to keep potential doses below regulatory limits.

Safety and Radiation Monitoring System for the New ISAC Target Stations

The proposed operating configurations for BL4N to dual target stations and the target hall above those stations will influence the design of new radiation safety systems and the required modifications to existing radiation safety systems. The amount of shielding and desired operational flexibility will play a key role in determining the complexity of these systems. However, the following general assumptions can be made:

- Additional prompt radiation monitors will be required both inside and outside target shielding. These monitors must be interfaced to the existing 500 MeV Radiation Monitoring System and trip off the 500 MeV accelerator should radiation levels exceed acceptable levels.
- Additional accelerator interlocks will be required in the 500 MeV Central Safety System to ensure beams are being directed to the correct target station and that BL4N is off for access to beam line tunnels.
- A new safety system will be required to control access to the new Target Hall for local target movements under crane control.
- Information from residual radiation monitors for new targets, water packages, and hot storage areas will be required by multiple user groups, as will information from new local and nuclear ventilation air monitors.

Services for the New ISAC Target Stations

The nuclear ventilation in the new ISAC Target Maintenance Hall will be designed to have laminar flow across the hall to provide optimum airflow to all areas of the hall, eliminate dead zones, and facilitate monitoring for potential airborne radioactivity.

Shielding for the activated water package will be sufficient to accommodate the short-lived activation species such as ^{14}O and ^{16}N that have energetic gamma rays. In addition, shielding will be provided around the whole active cooling water package.

The volume of the primary exhaust in the new target station design will be limited to minimize the volume of exhaust gases generated from the primary vacuum. Several operating storage tanks will be provided for storage of the exhaust gases. These tanks will be connected in series to allow optimum decay before transfer to a series of decay storage tanks and eventually up the stack. With the smaller volume, the intent is to provide sufficient storage to allow residual activity to decay one year before releasing to the nuclear exhaust.

Expected Yield at the New ISAC Target Station

The new target station will allow us to use a proton beam with intensity up to 100 μA on a non-actinide target and up to 10 μA of protons or up to 10 mA of electrons on a ^{238}U target. Figure 6 shows the exotic nuclear beam intensity produces

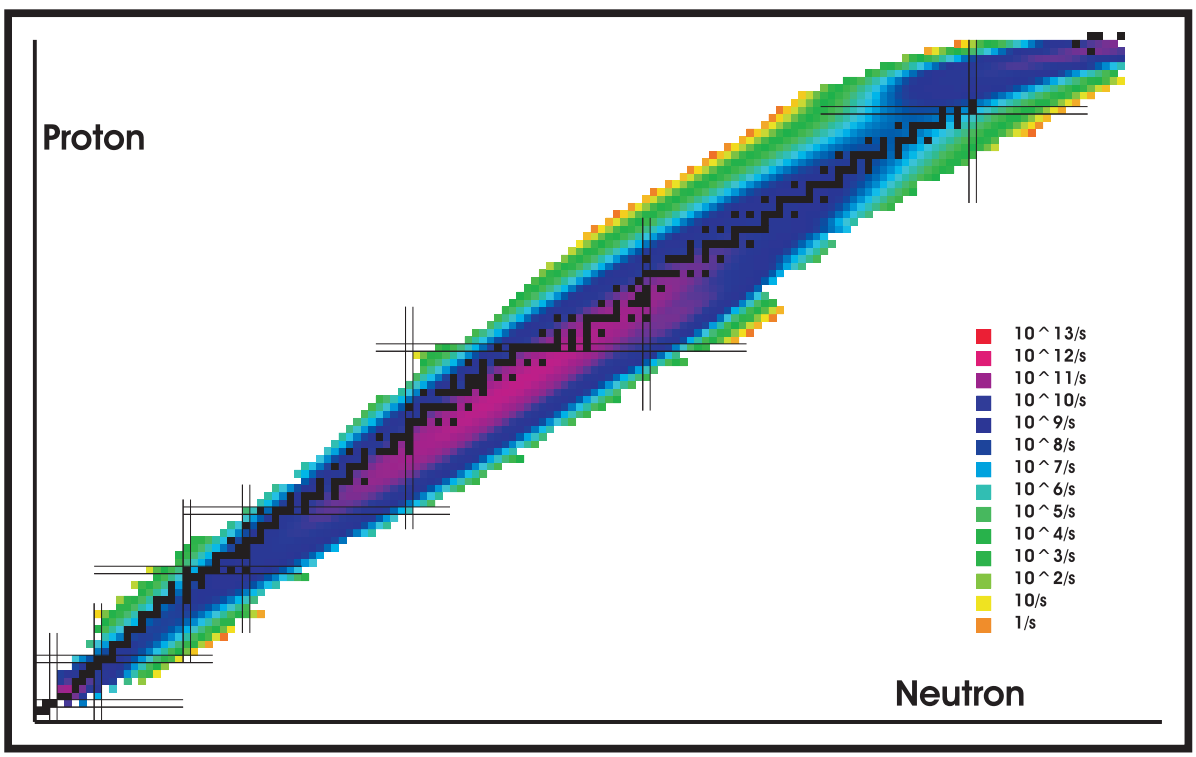

Figure 7: Production yield in target assuming a 10 μA proton beam onto a 25 g/cm^2 UC_X target using FLUKA.

in target, assuming a 100 μA 500MeV proton beam on a 10 g/cm^2 Nb target. Figure 7 shows the in-target production using 10 μA on a 25 g/cm^2 ^{238}U target.

A Monte Carlo simulation of the photo-fission expected from a 50 MeV 10 mA electron beam has been performed. We used multiple electron scattering convoluted with the angular distribution of the emitted braking radiation. The photon beam is attenuated via various attenuation mechanisms: photo-electric effect: $E_\gamma < 0.1$ MeV; Compton scattering: $0.1 < E_\gamma < 5$ MeV: and pair production: $E_\gamma > 1.022$ MeV. Only the Compton and the pair production are taken into account because at low photon energy the contribution to photo-fission can be neglected. Figure 8 shows the photo-fission products distribution using 50 MeV 10mA electron beam onto a 15 g/cm^2 ^{238}U target onto a Hg converter.

Conclusion

The TRIUMF Five-Year Plan for 2010–2015 proposes to expand the ISAC capability to deliver two beams simultaneously with the possibility of extending this to three beams in the following five-year period. At the moment, only one RIB can be delivered at a time, creating a long list of experiments waiting for beam time. Between 2010 and 2015, we plan to build one new target stations allowing the delivery of two simultaneous RIBs to users. In addition to the existing ISAC target station, we will have one more target station in ISAC, compatible with either 100 μA of proton beam from the new cyclotron beam line or 10 mA of electron beam from a new electron superconducting linac.

The proposed new target stations use a similar target design as the one devel-

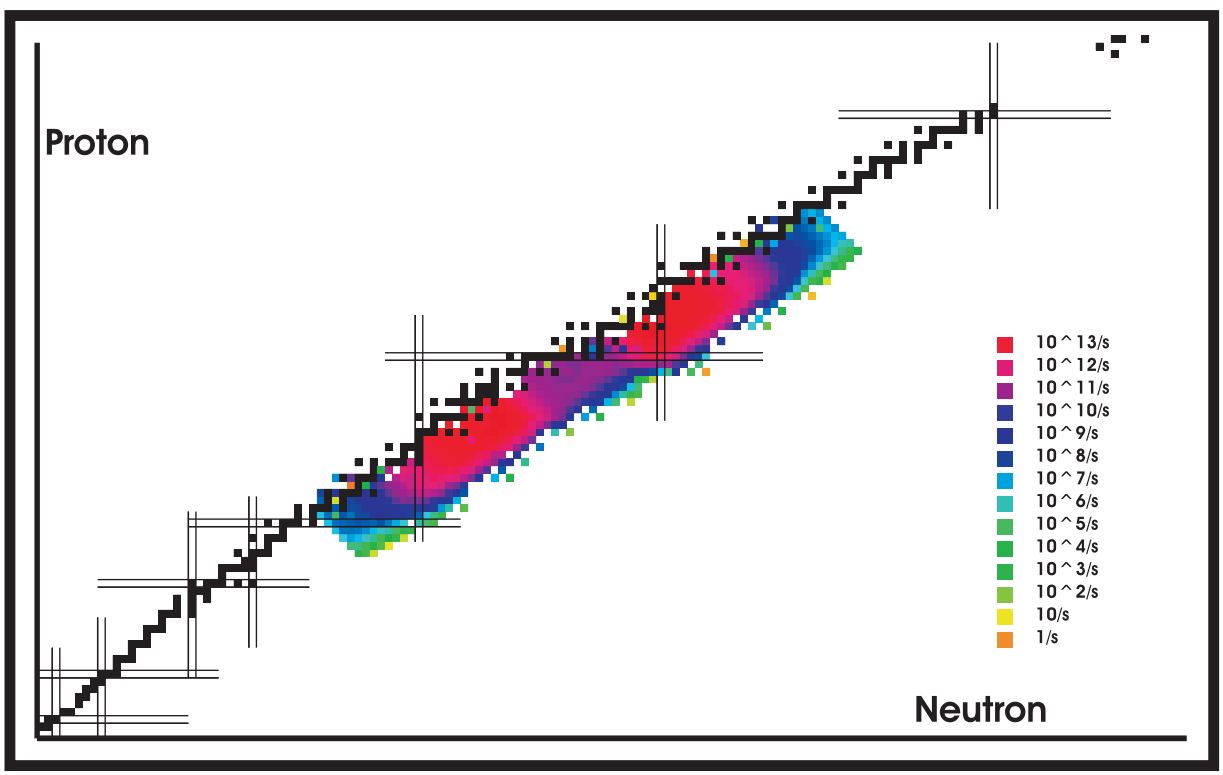

Figure 8: Production in target assuming 4.6x10^{13} photo-fission induced into a 15 g/cm^2 UC_X target.

oped at ISAC over the last 10 years of operation. This design can accommodate proton beams up to 100 μA on non-actinide targets and 10 μA proton beams and up to 10 mA electron beam on actinide targets. The proposed project is compatible with the ISAC scientific program.

6.2.1.2.4

Front End

Introduction

In the ISAC-I facility, 500 MeV protons at up to 100 μA can be steered onto one of two production targets to produce short-lived isotopes. The isotopes pass through a heated tube to a source where they are ionized, accelerated off the source high voltage platform at up to 60 kV, and sent through a mass separator to select the ion beam of choice. The beam is transported in the low-energy beam transport (LEBT) electrostatic beam line and sent via a switchyard to either the low-energy experimental area or to a series of room temperature accelerating structures to the ISAC-I medium-energy experimental area. For high-energy delivery, the DTL beam is deflected north along an S-bend transfer line to the ISAC-II superconducting linear accelerator (SC-linac) for acceleration above the Coulomb barrier.

The current isotope production facility has a number of strengths and weaknesses. They are:

Strengths

1. The cyclotron provides the highest power driver beam (50 kW) of any operating isotope separation on-line (ISOL)-based facility. High-power targets have been developed to fully utilize this beam power and have the potential to produce high intensities of exotic nuclei.
2. Two 50 kW target stations are available to help reduce the switchover time between targets.

3. The present facility is strong for nuclear astrophysics in the ISAC-I hall. The mass range of interest for this physics tends to be in the lighter masses so the radio-frequency quadrupole (RFQ) accelerator limitation of $4 \leq A/q \leq 30$ is high enough that charge state booster (CSB) operation is not required and efficiencies of the order of 20 to 25% can be attained dominated by the charge-state distribution after stripping at 150 keV/u. The flexibility and reliability of the accelerators coupled with excellent beam quality provide the capability for a successful user program.

Weaknesses

1. The present facility has nine major experimental infrastructures but only one rare-isotope beam (RIB) available at any given time. With the cyclotron typically shut down for four months each year, there is less than one month of beam time per experimental facility annually.
2. The beam time is further reduced due to target preparation and beam development for future experiments because there is no on-line target test area. The present target design and hot-cell arrangement, coupled with hall access restrictions, demands a four- to five-week turn-around time for target replacement and periodic vault access is required during the switchover. The vault access reduces the beam delivery time from the other target.
3. Other programs are pushing for actinide target use; however, the use of actinide targets is problematic with the present target design because the targets are craned to the hot-cell after use, and there is no provision for containment of any loose contamination.
4. The present accelerator layout is not advantageous for nuclear physics of heavy ions in ISAC-II due to the $2 \leq A/q \leq 6$ limitation. For masses with $A > 30$, the CSB is used but for ions with $A > 120$, the most probable charge state results in ions with $A/q > 6$ and the efficiency is sharply reduced for heavier ions. This limitation can be partially addressed in the short term by the addition of new power supplies in the ISAC-I medium-energy beam transport (MEBT) section to expand the ISAC capability to $2 \leq A/q \leq 7$ and $A > 150$.

Proposal

The aim of the proposal for a new ISAC front end is to get more RIBs on target to produce more physics. Fundamental to the plan is the eventual delivery of three simultaneous RIBs to three experimental areas. The expansion requires the addition of two new driver beams, one from a second cyclotron proton beam line and one from a new electron linac (e-linac), and two new independent actinide target areas plus a flexible front end capable of delivering the new beams to the experiments. The proposal addresses the key weaknesses inherent in the present ISAC facility and can be implemented in a staged way.

Features

1. Three simultaneous beams will at least triple the beam time on target. In addition, the electron driver beam could be available during the cyclotron shutdown periods either enhancing the beam time even further or augmenting development time.
2. Three target stations will facilitate target and source development. The new target stations will be designed for actinide target use with self-containment and will be engineered for a turnaround of only a few days.
3. The new installation will be designed with independent separators that allow simultaneous operation.
4. A new accelerator path will be created to be compatible with beams up to $A/q = 9$ so that all CSB-produced beams, including the existing ECR PHOENIX breeder, can be used at the most probable charge state for all masses.

Stages

1. The first stage proposed for this Five-Year Plan includes the additions of:
   a. The e-linac to 50 MeV, 1 mA (50 kW) capability; 30 MeV by the end of 2012;
   b. The completion of BL4N to a capability of 500 MeV, 200 μA (100 kW) by the end of 2014;
   c. One new target station with 50 kW electron/proton capability by April 2013;
   d. A new medium-resolution mass separator (MRS) and low-energy beam transport (LEBT) to deliver beams from the new target station to the low-energy area by April 2013; and,
   e. A new CSB and LEBT to allow the acceleration of beams from the new target area by the end of 2014.
2. The second stage proposed for the next Five-Year Plan would include the addition of:
   a. The upgrade of the e-linac to 50 MeV, 10 mA (500 kW);
   b. A second new target station with 500 kW electron and 50 kW proton capability;
   c. An expanded low-energy section with high-resolution separator (HRS) allowing simultaneous beams from the two new target areas; and
   d. A new accelerator front end to allow two simultaneous accelerated beams.

Components

Pre-Separator/Mass Separator

General Comments

The isotope production methods at an ISOL facility are not generally very selective: spallation, neutron-induced fission, or photo-fission produce a huge variety of elements. Therefore, to deliver an isotopically pure beam to the experimental areas, an efficient separation method has to be used. The mass-separator performance specification is determined by the beam quality, the mass range of interest, and the desired transmission. The required performance is set by the mass difference along isobaric lines and the relative abundance of the various isobars. The mass resolution is the minimum relative mass difference $\delta m/m$ that can be resolved with a given system. The mass resolving power is the reciprocal of the resolution.

Three distinct goals of the separator system are:

1. Elimination of most of the radioactivity to avoid activation in the downstream transport or accelerator.
2. Elimination of the stable contaminants produced in the source system (stable isobars, isotopes with the same mass-to-charge ratio, and molecules), which can dominate the desired radioactive ion beam by several orders of magnitude.
3. Separation of all radioactive ion species.

The first goal is achieved by incorporating a low-resolution pre-separator magnet just downstream of the target/source. A resolving power of only ~100 is sufficient to remove most of the radioactivity at the image slit of the pre-separator. For light ions, the elimination of most of the contaminants requires a resolving power in the range of 1,000–2,000. In some particular cases, a resolving power of 20,000 could be needed. The selectivity of the source system could help to suppress these specific elements. As well, the use of experimental techniques to reject some unwanted components at the experiment can relax the separation requirements, resulting in a better transmission and reduced tuning time. In general, with heavier ions, the mass difference between isobars become smaller, and a mass-resolving power of 10,000 or more would be useful in many cases. There are some ions (*i.e.*, ^{8}Li for materials science investigations) where the resolution of the pre-separator is sufficient to separate the ion of choice, and a method of bypassing the mass separator would reduce tuning time significantly.

The beam quality is important in determining the resolving power of a certain magnetic system. The resolving power is given by the ratio of the magnet dispersion and the beam width at the focal point, $R_m = D_m/x$. Thus, beam emittance is an important criterion that affects the achievable spot size for a given tune. For example, the use of an RF cooler to reduce significantly the emittance of the beam entering a mass-separator system can significantly improve the resolving power.

Concept

For these reasons, it is useful to consider a switchyard that is, depending on the experiment, capable of low-resolution, medium-resolution, or high-resolution separation schemes. In general, the reduced resolution schemes are desired because it will reduce the tuning time required. The proposed configuration is shown in . Here, each of the two-target/source units has a pre-separator and individual transport lines directing the beams to a mass-separator Figure 1 switchyard. The beams after separation are directed to either one of two new vertical sections VS-2 or VS-3 for delivery to the upstairs experimental area. The pre-separator, associated optics and object and image slits would be housed in a shielded cave where the main radioactivity would be contained and key elements engineered for remote handling. Standard ISAC LEBT electrostatic components would be used to deliver the beam to either a medium-resolution spectrometer (MRS) or a high-resolution spectrometer (HRS). The medium-resolution leg would have a resolution of ~2,500 while the high-resolution leg would have a resolution of >15,000. The high-resolu-

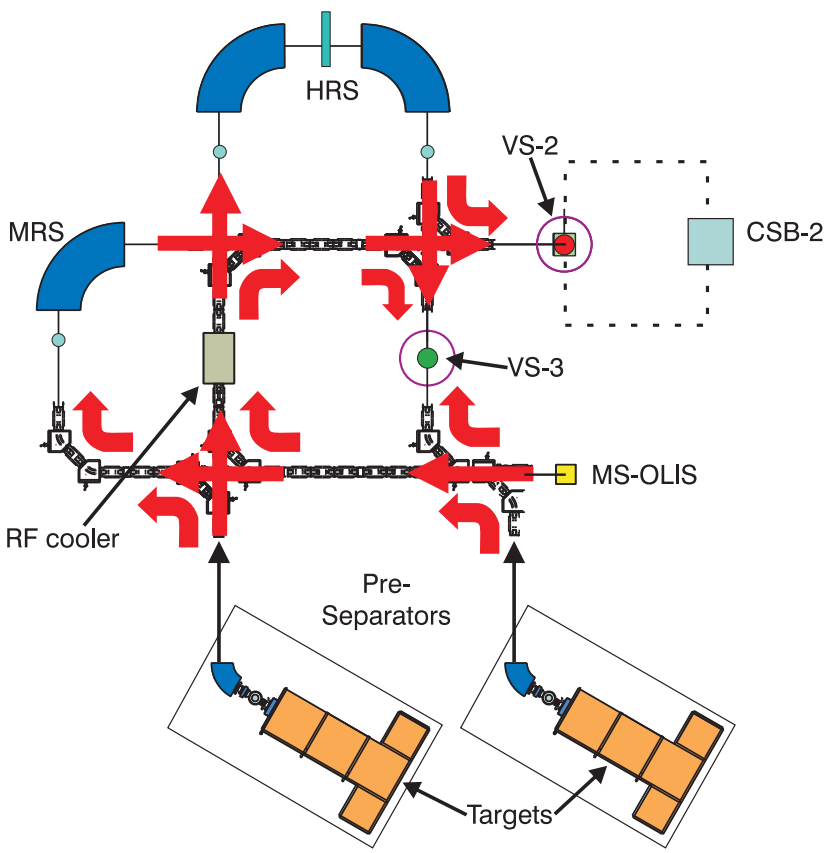

Figure 1: New target stations and downstairs mass-separator switchyard. The red arrows indicate possible beam paths. The MRS and HRS are accessible from either target via a flexible LEBT switchyard. The separated beam is sent upstairs via VS-2 or VS-3 to deliver beam to the accelerators or to the low-energy experimental area respectively. An off-line source (MS-OLIS) is available for separator tuning.

tion leg would be equipped with an RF cooler to reduce the emittance of the beam before separation. The switchyard is designed with sufficient flexibility that each of the targets can pass beams through the HRS while the beam from the other target can be sent to the MRS. In addition, a bypass line is available so that, if not required, a beam with pre-separation only could be sent to the experimental area.

The front-end-complex will be installed in stages. A first stage will see the e-linac being installed to produce RIBs from one new target station. This first target would require only one mass separator and vertical section to transport the new RIB beam upstairs. The proposed first stage of the mass-separator switchyard is shown in Figure 2. A bypass line allows beam delivery independent of the mass-separator.

RF Cooler for New Front-End Complex

To improve the performance of the high-resolution leg of the new facility, an RF cooler will be installed to reduce the incoming beam emittance before separation. An RF cooler offers reduced transverse emittance and energy spread, along with beam-bunching capability, for a wide range of masses on a timescale (< ms) appropriate for radioactive ion beams. Such radio-frequency quadrupole coolers have been under development for many years at several facilities worldwide and, at ISOLDE-CERN, one has recently been tested online. Other proposed facilities plan to make use of an RF cooler to improve mass-separation abilities, *e.g.*, SuperCaribu at ANL and ISF at the NSCL.

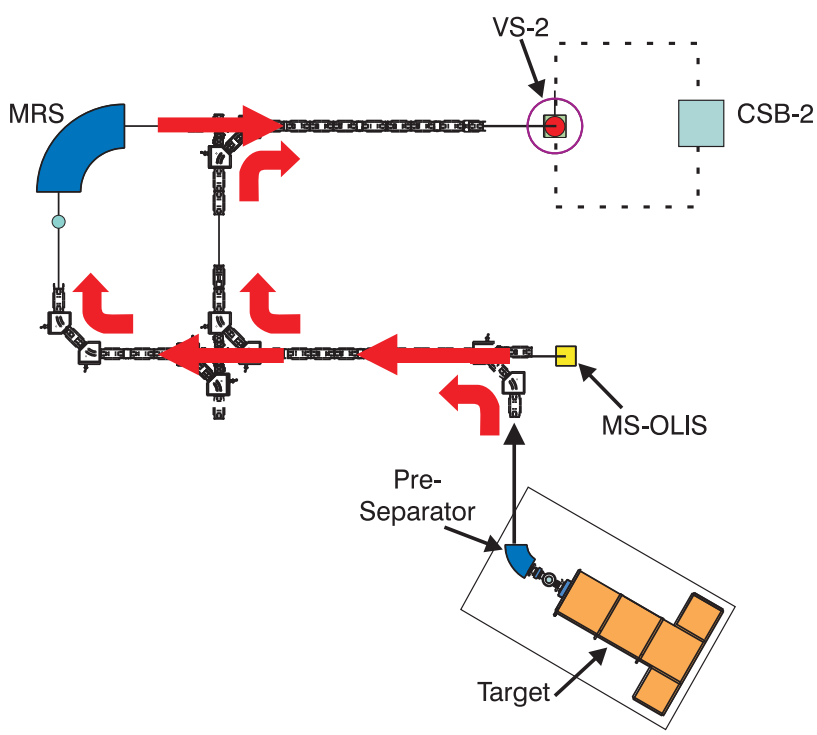

Figure 2: First stage of the mass-separator switchyard coinciding with the installation of the new target station.

At ISOLDE, the ISCOOL RF Cooler has been designed to be a general-purpose ion trap for the preparation of cooled and, if desired, bunched isotope beams. It is composed of three elements: an RFQ field for radial confinement; DC potentials for controlling extraction in bunched or continuous mode; and He buffer gas for ion-motion cooling. While the transmission through the RF cooler depends on the emittance of the target/ion source used, the resulting emittance is typically a factor of 10 better. For the few elements tested, transmission ranged from 20–30% for masses below 40, and up to 70–80% for higher masses when operated in continuous mode.

At ISAC-I, beams extracted from a surface ion source have emittances of about 10π mm mrad, whereas, from plasma sources, emittances are in the range of 20–30π mm mrad. With an RF cooler at the new front end, beam emittance could be reduced down to better than 3π mm mrad, enhancing the capabilities of the mass-separation system by at least a factor of three with a proportional increase in resolving power. Local expertise already exists at

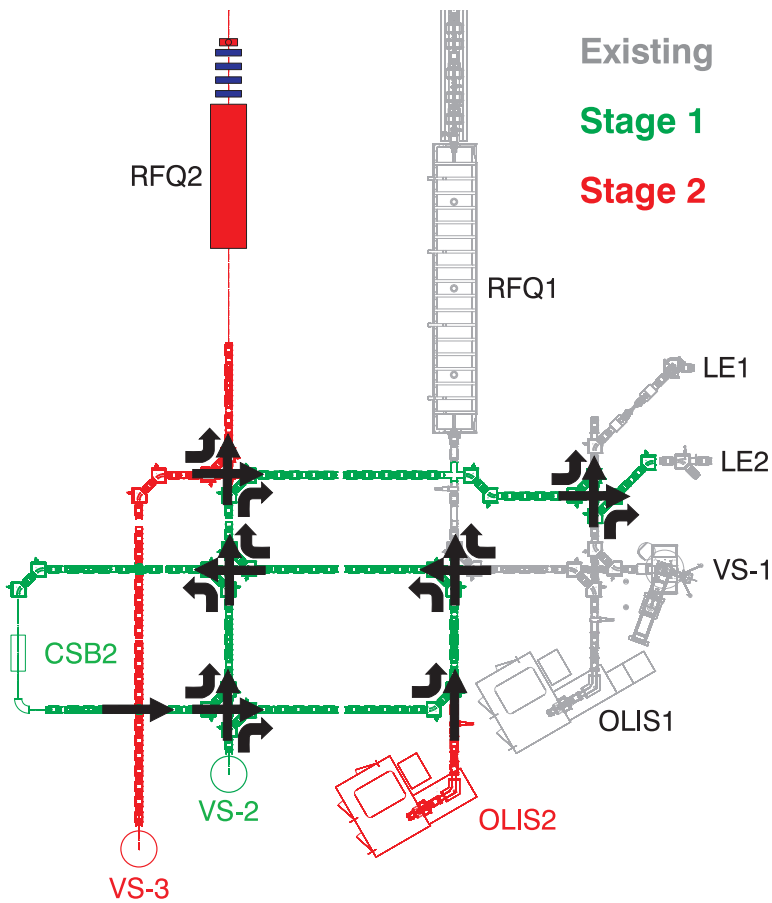

Figure 3: The new ground level LEBT for the new front end. The existing section appears in grey. The first stage installation is shown in green and the second stage is shown in red. The beam is delivered to the ground level from the target level through three vertical sections; VS-1 (existing beam), VS-2 (Stage 1) and VS-3 (Stage 2). The black arrows indicate the available beam paths.

TRIUMF as the TITAN facility has an RF cooler and buncher at the beginning of the ion-trap system.

Low-Energy Beam Transport

General Comment

The low-energy beam transport (LEBT) is the all-electrostatic transport that takes the beam at source potential (≤ 60 kV) from the downstairs target/separator area to the upstairs experimental floor for delivery to the low-energy areas or to the accelerators. Substantial LEBT transport has already been installed in ISAC-I. The design of the new installation will copy the standard building blocks that comprise the present installation. In the case of the LEBT downstream of the charge state booster (CSB), some modifications to the components will be required for it to be compatible with achieving a vacuum ($< 5 \times 10^{-8}$ torr) to transport high charge state beams with low loss. A design goal of the new installation is to provide enough flexibility that any of the target stations, existing or new, can deliver beams to any of the three experimental areas, low energy, medium energy or high energy, so that the RIB beams from each target can be optimized for a given experiment. Another goal is to provide a second path to the low-energy experimental area where there is the largest buildup of experimental infrastructure.

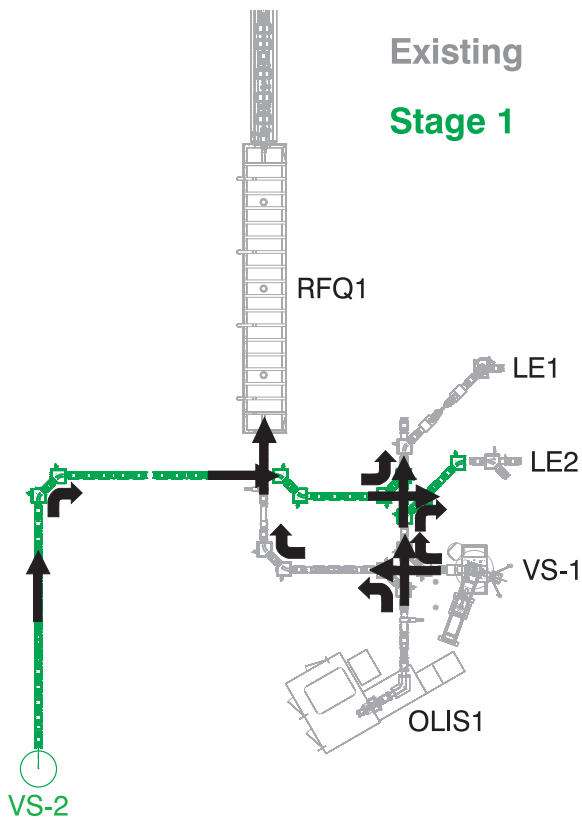

Figure 4: The first stage of the new front-end EBT.

Concept

The ground floor LEBT for new front end is shown in Figure 3. Two new vertical transport lines VS-2 and VS-3 bring RIBs from the new downstairs target area, adding to existing RIB line VS-1 to provide three simultaneous RIBs in the fullness of time. The new LEBT switchyard adds a new line to the low-energy experimental area that splits the area into two halves: LE1 feeds 8π, the general-purpose station and the future electron dipole moment (EDM) facility and LE2 feeds TITAN (TRIUMF Ion Trap for Atomic and Nuclear science), β-NMR, and Osaka. A switchyard is used to select which of the low-energy feeds goes to which experimental area. A second charge state booster (CSB-2) is added in Stage 1 to increase the charge state of beams selected for acceleration. An extra line is added so that beams from the existing target area can also be boosted in CSB-2 if preferred. In Stage 2, a second accelerator path is available with the addition of RFQ-2 positioned beside the existing ISAC RFQ-1. The new LEBT switchyard will deliver beam from any target to either accelerator front end for simultaneous delivery. A second off-line ion source (OLIS-2) allows tuning of either accelerator line while delivering RIBs to the other. The LEBT vacuum normally reaches 2 x10^{-7} torr. It should be noted that transporting the higher charge states from the CSBs would demand a better vacuum to reduce transmission losses ($< 5 \times 10^{-8}$ torr).

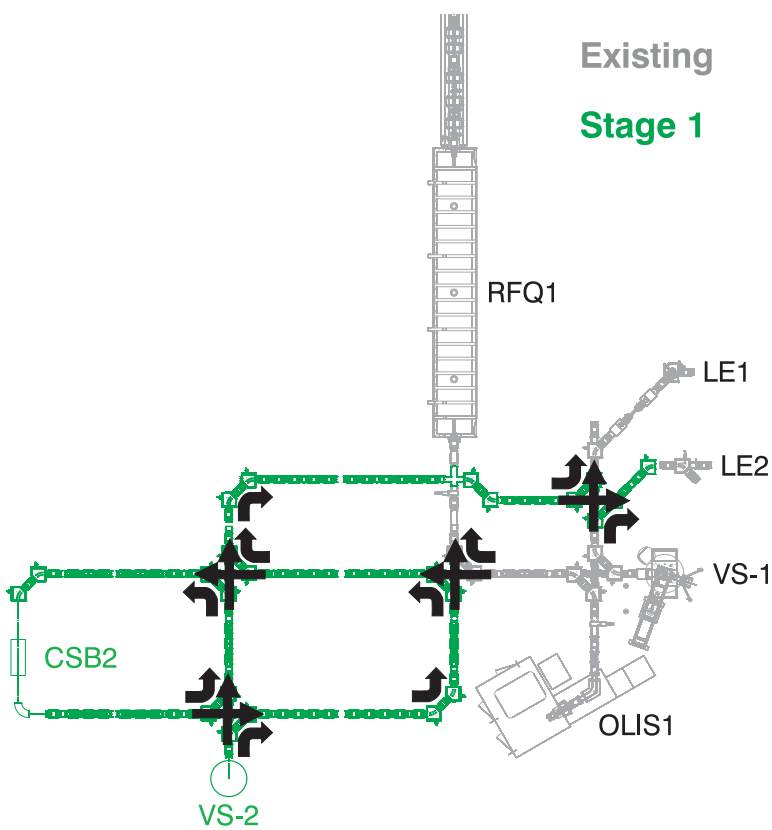

Figure 5: The continuation of Stage 1 will see the installation of CSB-2 to prepare both the ISAC-I and new front-end beam for acceleration.

Staging

The new front-end LEBT would be installed in stages as required by the target installation schedule and the experimental program. A first stage (see Figure 4) would see a low-energy transport line go from VS-2, fed from the new e-linac on Target 2 to the low-energy area. A new switchyard in the low-energy area will divide it into two equal halves: LE1 and LE2. The switchyard allows delivery of VS1 to LE1 and simultaneous delivery of VS2 to LE2, or vice versa. The LE1 transport feeds 8π, GPS, or the new EDM area. The LE2 transport feeds TITAN, β-NMR, and Osaka. The accelerated beam program is only fed from Target 1 coupled with CSB-1.

The Stage 1 installation would continue in Stage 1b with the installation of the CSB-2 and transport lines to allow charge boosting of beams and subsequent acceleration from Target 1 (ISAC-I) or Target 2 in the new target area (see Figure 5). With the planned installation, the new CSB-2 would be reachable from either the new Target 2 or the existing Target 1, with a common delivery to the existing RFQ. The last stage of the installation, Stage 2, would coincide with the installation of the second target station in the new front end, Target 3 (see Figure 1).

Charge State Booster (CSB-2)

Increasing the charge state of ions is done to reduce the total voltage required to accelerate ions to a particular energy. Common techniques to increase the charge state are: stripping the beam in a thin foil or charge breeding in either an electron beam ion source (EBIS) or an electron cyclotron resonance ion source (ECRIS). The former technique is used in ISAC-I for ions with mass $A \leq 30$. Here a 1+ beam is accelerated to 150 keV/u and passed through a stripping foil to achieve beams with $A/q \leq 6$. In the new front end, the specification will be expanded to include all masses ($A < 240$), and the requirements on the initial 1+ acceleration would be more demanding.

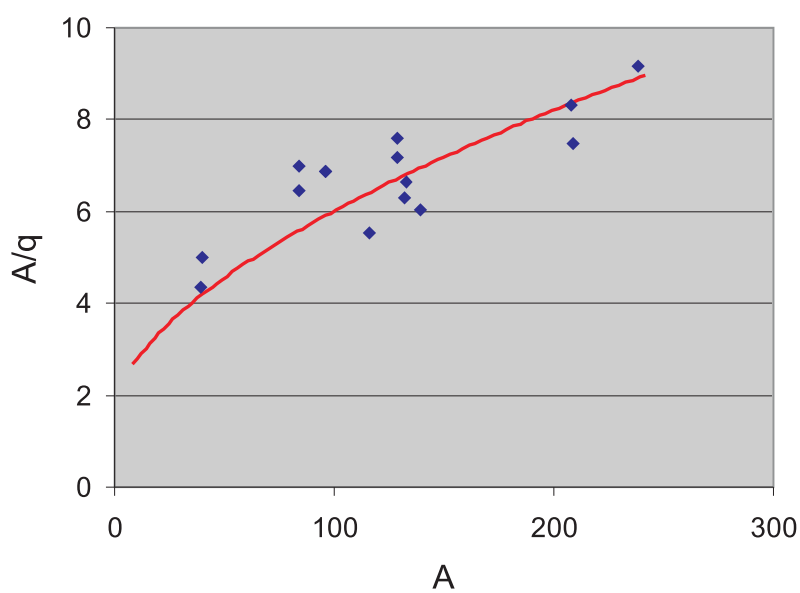

Figure 6: Expected *A/q* value for most probable charge state from CSB-1.

The technique of accelerating the 1^+ beam to a gas stripper at an intermediate energy was analyzed but abandoned as impractical due to the high accelerating voltage required. Of the charge breeding techniques, only the EBIS at ISOLDE is routinely used for on-line production. The EBIS source is presently operated as a pulsed device where a 1^+ beam bunch is injected and step-wise ionized in an electron beam axially focused by a strong solenoid. The REX-ISOLDE installation includes a combination of a Penning trap (REXTRAP) for ion cooling and bunching, and an EBIS (REXEBIS) for charge breeding. With the ECRIS, 1^+ ions are fed into a magnetically confined plasma region. Plasma electrons are heated resonantly in an RF field at their cyclotron frequency to allow them to strip the ions to higher charge states. The source operates in continuous mode with 1^+ ions continuously injected and n^+ ions continuously removed after some confinement or breeding time. The existing TRIUMF ECRIS charge state booster is a PHOENIX source with a confinement field provided by a room temperature solenoid and the RF field supplied at 14.5 GHz.

The charge state achieved is a function of the plasma density and confinement time. These values are determined by the magnetic field, RF frequency, and RF power. For the TRIUMF PHOENIX source, experiments have shown that the most probable charge is dependent on the mass of the ion with roughly the relationship shown in Figure 6. This shows, for example, that the present ISAC-I accelerator limit of $A/q = 6$ is exceeded for ions with a mass of $A > 100$. This sets the present mass limit in the facility to $A < 120$. A modest upgrade to the ISAC MEBT would increase this limit to $A/q = 7$ and extend the mass range to $A \sim 150$. Typical production efficiencies in the most probable charge state from the PHOENIX source are in the range of 5%.

Based on the REXEBIS and PHOENIX developments, some comparisons of the two methods can be drawn. As mentioned, the EBIS is now a pulsed device with a pulse rate given by the breeding time while the ECRIS operates in continuous mode. The EBIS has better performances in terms of the final charge state, of breeding time, and of beam purity with several orders of magnitude lower background. In addition, the method is not species dependent; the charge breeding of any element is possible. Short-lived heavy isotopes can be bred in reasonably short periods with an EBIS breeder. On the other hand, the

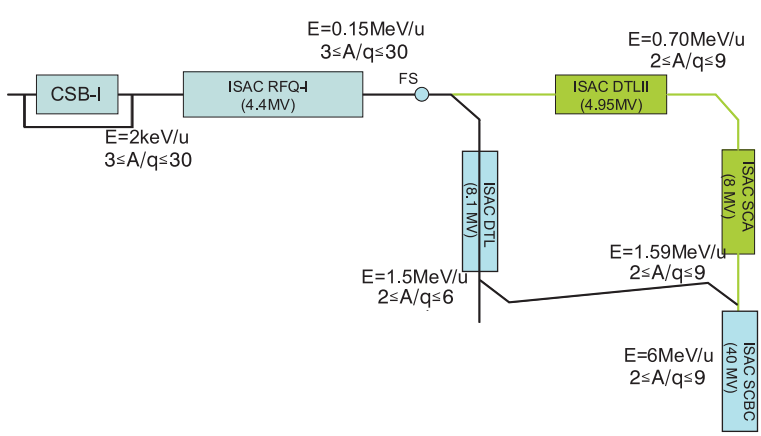

Figure 7: The existing ISAC-I and ISAC-II accelerator chain in blue and the initial upgrade of the new accelerator system in green.

ECR charge breeder has much higher intensity capabilities, operates CW, and is robust. Operating an EBIS will also require bunching and cooling in front of it. In principal, this can be done with a cooler in between the separator magnets, but it may be beneficial to have a dedicated one directly in front of the EBIS.

Parameter	REX-EBIS	PHOENIX
Efficiency	4-15%	2-10%
Breeding Time	13-500 ms	100-300 ms
A/q	2-4.5	4-8
Mode	pulsed	Cw
I max	Few nA	>1 micA
Emittance (20q keV)	15-20 mm mrad	15-20 mm mrad
Background	<0.1 pA	<2 nA
Complexity	High	Robust/simple

The technology choice for the new front-end charge state booster between EBIS and ECRIS sources will be made by 2010 after the on-line performance of CSB-1 (ECRIS) with rare-isotope beam delivery can be evaluated. TRIUMF also has a working EBIS on site with the TITAN experimental installation. The second accelerator path in this proposal uses an upper mass to charge ratio of $A/q = 9$ that is compatible with the existing CSB-1 source and either the EBIS or ECRIS choice for CSB-2.

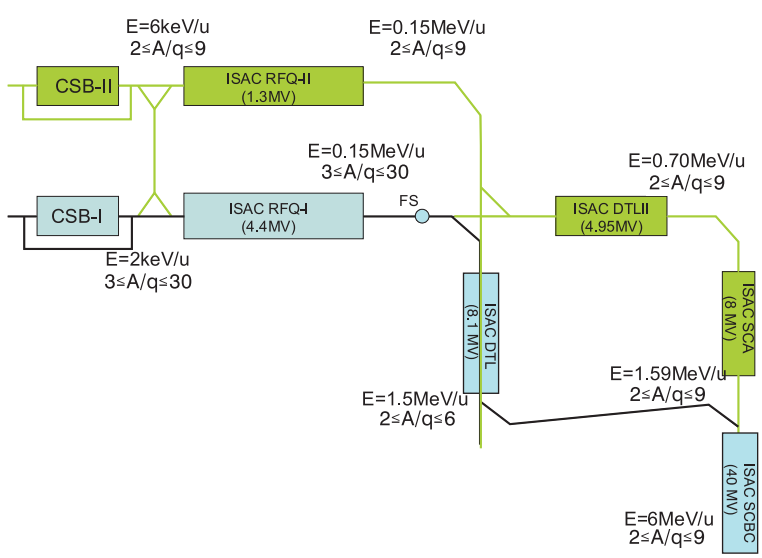

Figure 8: Schematic of the Stage 2 accelerator installation in green.

New Accelerator Path

The upgrade to the accelerator to allow two simultaneous accelerated beams is part of the second stage of the ISAC-II upgrade and so is not a part of this Five-Year Plan. The present ISAC-I RFQ-I can accelerate ions with mass to charge ratio of $4 \leq A/q \leq 30$ to 150 keV/u. The beam is then stripped to a charge state up to $A/q = 6$ for acceleration by the ISAC DTL. Beams from the ISAC-DTL are either sent to the ISAC-I medium-energy area ($0.15 \leq E \leq 1.8$ MeV/u) or sent to the ISAC-II SC-linac through an S-bend transport line at $E = 1.5$ MeV/u (see Fig 7).

To accelerate two beams simultaneously it is necessary to add a new accelerator front end fed from the new LEBT switchyard (see Figure 8). A new RFQ compatible with accelerating ions up to $A/q = 9$ takes the beam to 150 keV/u. The A/q limit is set by the most probable charge produced in CSB-I and II for heavy masses. A new beam line running north of the existing RFQ into the ISAC-I vault will provide separate paths for ISAC-I and ISAC-II accelerated beams avoiding the ISAC-DTL bottleneck of $2 \leq A/q \leq 6$. A new medium-energy transport section, MEBT-II (see Figure 9) incorporates a switchyard that allows sending either of the RFQ beams to either of ISAC-I or ISAC-II simultaneously. The new beam line to ISAC-II will include a room-temperature drift tube linac (DTL-II) to boost the energy from 0.15 MeV/u to 0.7 MeV/u for beams up to $A/q = 9$ and a low-β section of the SC-Linac to boost the energy of the ions to at least 1.5 MeV/u for injection into the rest of the SC-linac. A magnetic switchyard would enable beams from RFQ-I or RFQ-II to be sent to either ISAC-I or ISAC-II as required.

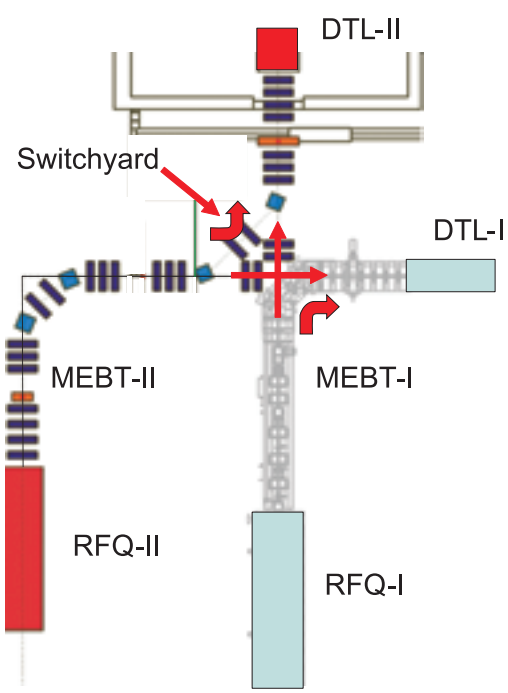

Figure 9: RFQ-II, MEBT-II, MEBT switchyard and matching into DTL-I.

6.2.1.2.5

Complementarity of Using Electrons and Protons for Neutron-Rich Isotope Production

Nature has an excellent way of producing a wide range of neutron-rich radioactive isotopes: fission of the uranium nucleus. Using a uranium target, short-lived isotopes can be produced using either a high-energy proton or an electron beam.[1] When an electron beam is used, the isotope production is dominated by exciting the giant dipole resonance, which then decays by fission to produce two intermediate mass isotopes. When a proton beam is

1 High-energy here means MeV, not the TeV of elementary-particle physics.

used, spallation, fragmentation, and fission processes all contribute to isotope production, with spallation contributing significantly more than the other two processes. The electron beam generating isotopes by a single process produces a limited range of isotopes, albeit in large quantities. Because a limited range of neutron-rich isotopes near the fission-mass peaks is produced, the beams are cleaner (*i.e.*, fewer isobaric contaminants). By contrast, the proton beam produces a wider and broader range of neutron-rich isotopes. This larger range leads to beams with significantly more isobaric contaminants. Thus, the strengths and weaknesses of the two targets are coupled. If the electron beam produces the isotope of interest, it would be the preferred production method. On the other hand, many isotopes of interest can only be produced using a proton beam on an actinide target. In particular, the production of radioactive actinide elements required for the fundamental symmetries program and the neutron-rich isotopes of elements below the light fission mass peak, required for nuclear structure studies of halo nuclei and neutron skins, can only be produced using high-energy protons."

The spallation process with ~500 MeV protons produces a spectrum of isotopes peaked at $Z = 45$, $N = 68$ with an approximate Gaussian shape of width $\sigma_Z \sim 11$, $\sigma_N \sim 4$. The photo-fission process produces two much narrower peaks centred at $Z = 38$, $N = 58$ and $Z = 54$, $N = 86$, respectively. The calculated isotope production yields in a uranium target from both production mechanisms are shown in Figure 1. Note that the rare-isotope beam intensities will be considerably lower than the in-target production yields because of losses in extracting the isotopes from the target and delivering them to experiments. This problem is severe for Z between 40 and 46,which are refractory elements not released by the target. Outside this range, measurements can usually be made when the in-target yields are above 10^3-10^5, depending upon the half life of the isotope and the ionization efficiency of the element.

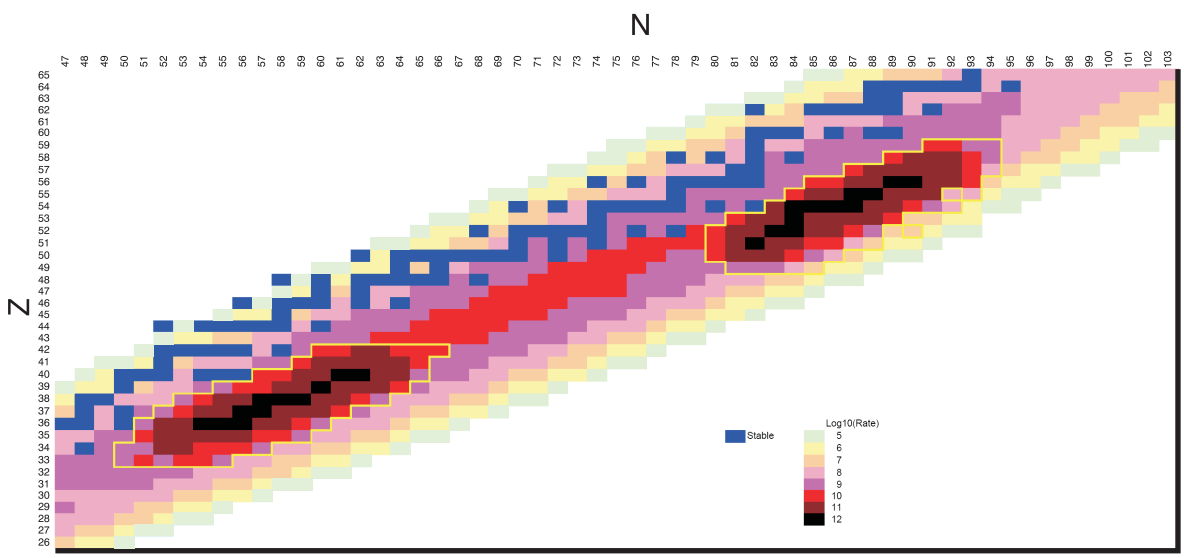

Figure 1: *Z* versus *N* plot of isotope production rates in a uranium target. The regions outlined in yellow are where the photo-fission dominates. Shown is the rate from the optimum of two production methods: 1 μA of 500 MeV protons in the majority of the diagram, and photo-production from 0.2 mA of 5 0MeV electrons in the two GDR peaks. The proton production rate peaks at 5×10^9 s^{-1} and the electron rate at 2×10^{12} s^{-1}.

The in-target production yields shown in Figure 1 were calculated for 1 μA of 500-MeV protons and 0.2 mA of 50-MeV electrons. These beam intensities are lower than the full intensity design limits by factors of 10 and 50 for protons and electrons, respectively. At these beam intensities the yield of neutron-rich isotopes near the fission fragment mass peaks produced by photofission exceed those obtained with high energy proton by nearly a factor of 400. However, the protons produce a large number of neutron rich isotopes that cannot be studied with a photon fission driver. The availability of both production processes at a single facility enhances the neutron-rich isotope reach of experiment. Furthermore, because the two techniques use different drivers, and maintenance of the drivers are normally scheduled at different times, rare-isotope beams can be available for longer than with a single driver. Figure 2 illustrates the reach of this combined facility for neutron-rich isotopes whose masses are unknown.

Isobaric Contamination

Practically all experiments at the on-line isotope mass separator (ISOLDE) facility at CERN that seek to go as far as possible from stability are limited, not from the low production of the most exotic nuclides, but rather from over-

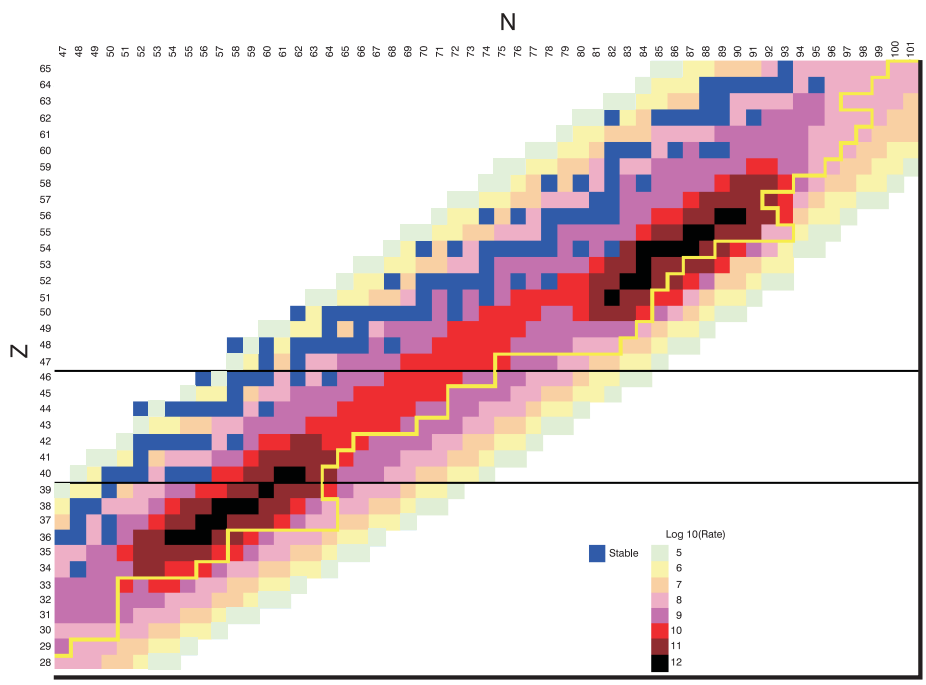

Figure 2: Rate of production of isotopes in the target. The masses of nuclides to the right of the yellow line are unknown (from: Nucleus-AMDC 2003). Between $Z = 40$ and 46, shown by black lines, the ion beam rate is suppressed due to the elements sticking to the target. Outside this range, mass measurements can be made when the in-target rate is above 10^5 per second. Thus, over 200 nuclides on this graph are potentially available for a first mass measurement. Significant improvements are also possible for hundreds more.

whelming isobaric contamination. Because ion traps have a limited space-charge capacity, they can easily be saturated with contamination, leaving no room for the isotope of interest. In the case of nuclear spectroscopy, the radioactivity from contamination causes too much dead time.

Resonant laser ionization has been a great help in reducing the density of isobaric contamination. However, surface-ionizable species are not suppressed so the result is often the same. Some success has been achieved with a special quartz transfer line that traps alkali atoms before the ionization region, but this technique, which is still in its infancy, makes for complicated and fragile target-ion source units.

Proton-induced fission is clearly unbeatable for certain regions: the light, neutron-rich species of interest for halo studies, the actinide region of interest of fundamental interaction studies, and the medium-mass ($A < 100$) proton-rich species. While photon-induced fission production may decline more rapidly far from stability on the neutron-rich side, it does possess one strong advantage in its comparative cleanliness. In the end, this advantage will probably prove to be decisive in forays towards the neutron drip line.

Some Specific Examples

One of the important "benchmark" nuclides is ^{132}Sn. Measurements of tin isotopes are thwarted by isobaric contamination from cesium and barium isobars that are surface ionized and three to four orders of magnitude more abundant. A recent mass measurement experiment of tin isotopes [M. Dworschak *et al.*, Phys. Rev. Lett. (2008)] uses a chemical sideband technique that tries to move the tins out from under the alkalis by making sulphur molecules. Unfortunately, alkalis also make molecules, and the experiment could not go beyond ^{134}Sn, despite a yield of over 10,000/s. This work was a continuation of the work in which, despite laser ionization of ^{132}Sn, it was impossible to overcome the Cs/Ba isobars [G. Sikler *et al.*, Nucl. Phys. A (2005)]. A glance at the photon-induced fission yields shows the Cs/Ba contamination to be lower than the yields of Sn.

The neutron rich beams for $28 \leq Z \leq 34$ should be much cleaner for photon fission than for proton fission because the intensity contours follow isobaric lines (rather than $N = Z$). While some contamination will still be present, it is at least not overwhelming.

Finally, for the lanthanide elements (for example, from Pm to Dy), the same argument holds: almost equal-intensity beams along isobaric chains for photon fission. These equal-intensity beams are in great contrast to proton fission where the situation is aggravated to the point of impossible experiments by a ridge of very high-intensity, proton-rich isobars.

In conclusion, given that experience shows isobaric contamination to be the bane of neutron-rich exploration efforts, any effort at increasing intensities must be accompanied by efforts in reducing contamination. The very mechanism of photon-induced fission is cleaner and would perfectly complement other areas of the chart where proton-induced fission is superior. With proven capabilities in mass separation and laser ionization, a combined arsenal of proton- and photon-induced fission, along with spallation, would make TRIUMF a truly unique facility, at the forefront of nuclear science.

6.2.1.2.6

International Competitiveness

First-generation rare-isotope beam facilities are operating in Europe, North America, and Asia and several laboratories are undertaking significant upgrades to prepare second-generation facilities. The first-generation facilities continue to produce important results, and ambitious experiments are planned with them in the next few years. However, the second-generation facilities are where breakthroughs, which will significantly increase our understanding of atomic nuclei, are most anticipated.

The research on rare isotopes is receiving global interest, and many countries are gearing up to engage in this exciting field (see Figure 1 and Table 1). Through TRIUMF, Canada has a unique opportunity to "strike first" in this high priority science endeavour.

In the report by the Working Group of Nuclear Physics of the Organisation for Economic Co-operation and Development (OECD) Megascience Forum, published in January 1999, one of the major recommendations stated:

> "The Working Group recognizes the importance of radioactive nuclear beam facilities for a broad program of research in fundamental nuclear physics and astrophysics, as well as applications of nuclear science. A new generation of radioactive nuclear beam facilities of each of the two basic types, ISOL and in-flight, should be built on a regional basis."[1]

1 OECD Megascience Forum, "Report of the Study Group on Radioactive Nuclear Beams to the Working Group on Nuclear Physics," Paris, France: OECD Megascience Working Group on Nuclear Physics, 1999, p. 39.

In-Flight and ISOL Facilities

The rare-isotope beam facilities are categorized as in-flight facilities and ISOL-type (Isotope Separation On-Line) facilities. In the ISOL facilities, the rare isotopes are produced inside a thick target at rest. They effuse out of the target matrix as neutral atoms and are ionized by a method that depends on the chemical element. The ions are then electrostatically accelerated to several keV and formed into a beam, mass separated, and delivered to the experiments or post-accelerated. With in-flight facilities, the primary heavy-ion beam hits a thin target at energies of some tens to hundreds of MeV/u. Rare isotopes are produced in the target and immediately recoil out at a similar energy to the primary beam. The rare-isotope beam is formed independently of the chemical element and can be separated using a combination of electric and magnetic fields. The beam is then delivered to the experiments at the same high energy.

The two different production processes are complementary as they provide access to different beams for different applications. ISOL production allows the production of many different isotopes but is limited in the chemical selection (refractory elements don't diffuse out of the target matrix) or the half-life of the isotope (if the extraction process is too long compared to the half-life, in reality the half-life limit is about 5 ms). The advantages of ISOL-type beams are the high intensity, excellent beam quality, and variable beam energy for experiments with stopped or post-accelerated beam.

Figure 1: Worldwide overview of leading rare-isotope facilities. The location for (US) FRIB has not yet been selected; therefore, it is placed arbitrarily in the middle of the country. (Note that this figure also appears in Chapter 2.)

In-flight production provides rare isotopes of all chemical elements (no target or ion source selectivity) and can reach very short half-lives (sub-ms). Ultimately, in-flight facilities will have a larger range of produced isotopes available for experiments. The secondary beam, however, is less mass resolved (different charge states are simultaneously produced, hence no unambiguous identification) and has poorer beam quality (higher longitudinal and transversal energy spread). It has discovery potential but will not provide for most of the science scope aimed for at TRIUMF. For example, the high-energy beams (50–1000 MeV/u) of rare isotopes are not suitable for probing the relevant regime for nuclear astrophysics. To provide partial access and to take advantage of the inherent beam properties of ISOL-type facilities, recent programs have started (RIKEN, MSU, ANL, GSI) to couple in-flight facilities to a low-energy program by injecting the rare-isotope beam into a gas-stopper cell, where the beam is brought to rest. It can then be extracted and formed into a low-energy beam for use with stopped or post-accelerated beams. The gas-cell stopping systems are still undergoing technical development, but none of the existing systems can operate fast enough to take full advantage of the half-life range of in-flight facilities (gas-cell extraction takes about 20–100 ms). Once fully developed, such systems will be able to provide the good beam quality needed for efficient post-acceleration, however, they are still limited in yields of rare isotopes.

Next-Generation Facilities

As Figure 1 shows, the global interest in rare isotope science has spawned many facilities. There are major facilities being built or already in operation that comprise second-generation technologies. European facilities are: GSI Darmstadt, Germany which has the approved upgrade to their international facility FAIR (Facility for Anti-proton and Ion Research); the SPIRAL facility at the GANIL National Laboratory in France which plans to upgrade to a hybrid ISOL and in-flight facility SPIRAL II; and the ISOLDE facility at CERN, Switzerland which plans to upgrade to HIE-ISOLDE. American facilities are: the Argonne National Laboratory ATLAS facility; the Holifield facility at Oak Ridge National Laboratory; and the MSU National Superconducting Cyclotron Laboratory (NSCL). In Asia there is one facility, RIBF (Rare-Isotope Beam Factory), at RIKEN (Rikagaku Kenkyūsho meaning "The Institute of Physical and Chemical Research") in Japan.

GSI, GANIL, ISOLDE, Holifield, NSCL, and ANL are first-generation facilities all in operation. The funded $US1.5 billion FAIR upgrade will be operational sometime between 2013 and 2015. GANIL plans to start operation of the SPIRAL II facilities in 2012, with stable beam, and, later, once regulatory issues have been resolved, with rare isotopes. The HIE-ISOLDE upgrade is envisioned for 2017. The US just announced the funding opportunity for a $540 million second-generation facility, with potential operation starting as early as 2017. The RIBF facility in Japan started operation in 2007 and uses the newest in-flight technology.

As indicated earlier, the largest range of isotopes can be produced at in-flight facilities, although the calculated intensity rates are as low as 10^{-6} ions/s. While at ISAC, experiments have been performed at intensities as low as 1 ion/s, the in-flight facilities only provide these beams (and rates) directly after

production, hence at very high energy (between 50 and 1,000 MeV/u (depending on the facility).

The physics scope probed at these facilities is complementary to what is aimed for at ISAC and hence, as shown in Table 2, no in-flight facility has physics programs that include all of the four research pillars of nuclear astrophysics, in particular, those using post-accelerated beams, nuclear structure, test of fundamental symmetries (such as EDM or APNC) and molecular and materials science. Only ISOL-type facilities will be able to compete with ISAC on these science goals; however, the unique state-of-the-art experimental devices already available at ISAC will provide an enormous competitive advantage over all the new facilities. All the new facilities incorporate the multiple beam option as a critical component, a component that is also key to the TRIUMF plans.

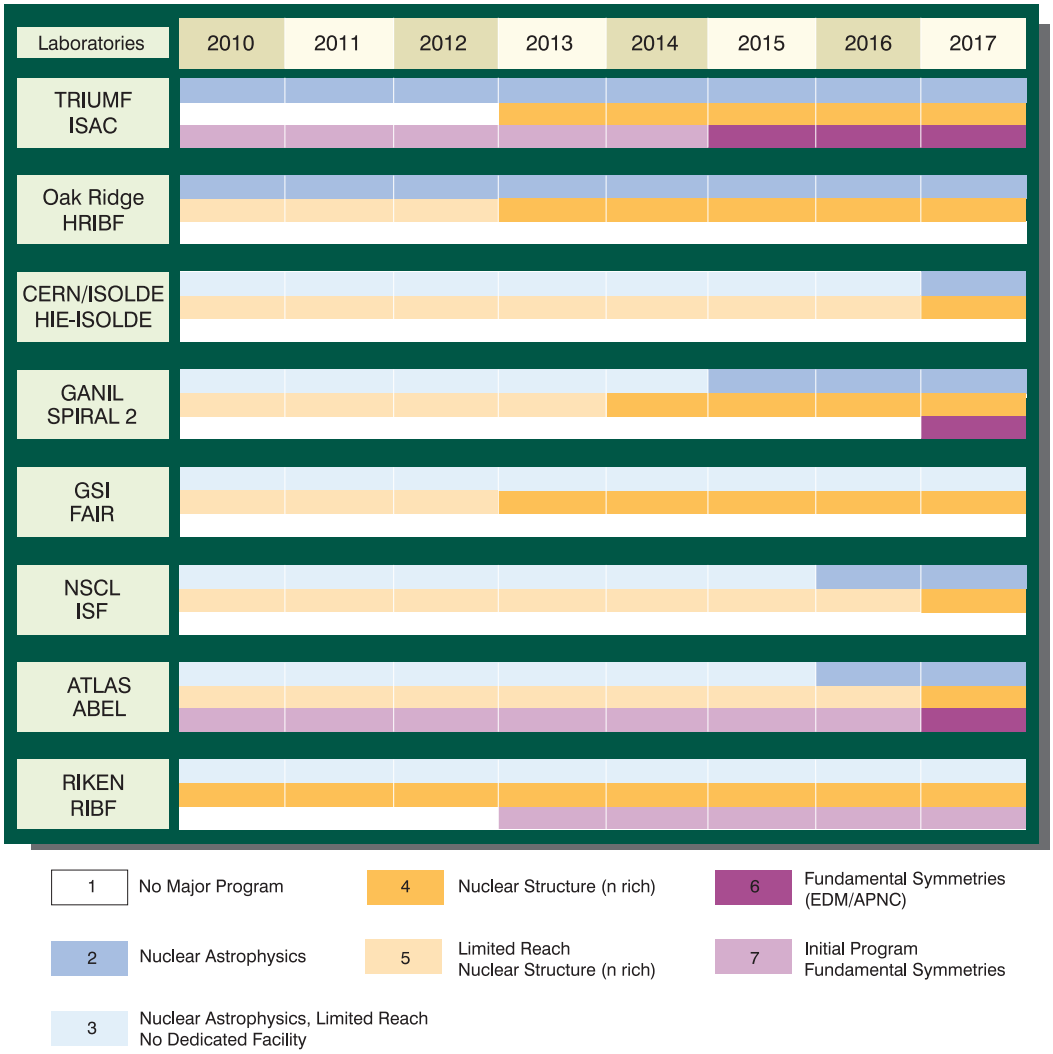

Figure 2: Comparison of key science programs addressed at present and future rare-isotope facilities. The three rows for each facility correspond to Nuclear Astrophysics, Nuclear Structure, and Fundamental Symmetries.

The window of opportunity presented by TRIUMF'S ISAC program and the next-generation upgrade is shown in Figure 2. This figure shows a comparison of key science programs addressed at present and future rare-isotope facilities. The figure displays the projected/proposed participation in physics fields for the years 2010 to 2017. The rare-beam facilities and their proposed upgrades are given on the left and the science areas are divided into: (1) No major program in the relevant field, possibly single experiments; (2) Nuclear Astrophysics, direct reaction rate measurements at astrophysical relevant energies; (3) Nuclear Astrophysics, with limited intensities, or no dedicated facilities, or no access to relevant energy range; (4) Nuclear Structure of neutron rich (medium or heavy) isotopes; (5) Nuclear Structure of neutron-rich isotopes, however, with limited reach; (6) Fundamental Symmetry studies such as EDM or APNC using rare-isotope beams; (7) Initial Program on Fundamental Symmetries including first measurements on Rn, Fr, and Ra isotopes.

The TRIUMF Five-Year Plan has a diverse program using neutron rich rare-isotope beams to study nuclear structure, nuclear astrophysics, and fundamental symmetries. As Figure 2 illustrates, this program is timely and internationally competitive.

Facility	Location	Operation	Plans
ISOL Facilities			
ISAC	Canada (TRIUMF)	Since 1999	e-linac (2013) 2nd p-line (2015)
Holifield	US (Oak Ridge)	Since 1997	e-rhodotron (2013)
ISOLDE	Switzerland (CERN)	Since 1968	HIE-ISOLDE (2017)
SPIRAL	France (GANIL)	Since 2001	SPIRAL II (2012)
In-Flight Facilities			
GSI	Germany	Since 1993	FAIR (2013-15)
NSCL	US (MSU)	Since 1990	FRIB-ISF
ATLAS	US (ANL)	Since 1996	FRIB-AEBL
RIBF	Japan (RIKEN)	Since 2007	

Table 1: An overview of the worldwide efforts involving rare-beam facilities. There is a clear complementary aspect in the different facilities, all having their own strengths and advantages.

Facility	Type	Max target time	Multi Beam ops	Expt at rest	Expts. at High-energy (~ 50 Mev/u)	Post-accel.	Nuclear Astro in inverse kinematic	Nuclear Structure	Fundam. Sym. (EDM APNC)	Atomic Physics	Material science
ISAC -I & II	ISOL p (up to 50 kW)	Up to 6 weeks	No	Yes	No	Yes (up to 12 MeV/u)	Yes	Yes	No	No	Yes
Next-Gen-eration ISAC	p (up to 100 kW) photo-fission (up to 500 kW)	Up to 6 weeks	Yes (3)	Yes	No	Yes (up to 12 MeV/u)	Yes	Yes	Yes	No	Yes
ISOLDE	ISOL	Up to 6 days	No	Yes	No	Yes	No	Yes	No	No	Yes
HIE-ISOLDE	ISOL (*p* up to 9 kW)	Up to 6 days	No	Yes	No	Yes (up to 10 Mev/u)	Yes	Yes	No	No	Yes
Holifield	ISOL (up to 5 kW)	Up to 3 weeks	No	Yes	No	Yes (neg. ions up to 25 Mev/u)	Yes	Yes	No	No	No
Holifield e-rib	ISOL/ photo-fis-sion (up to 25 kW)	Up to 3 weeks	No	Yes	No	Yes (neg. ions up to 25 Mev/u)	Yes	Yes	No	No	No
SPIRAL	ISOL (HI up to 6 kW)	Up to 3 weeks	No	Yes	No	Yes (up to 20 Mev/u)	No	Yes	No	Yes	Yes
SPIRAL II	ISOL (HI and *d* up to 200 kW)	Up to 12 weeks	Yes (5)	Yes	No	Yes (up to 20 Mev/u)	Yes	Yes	Yes	Yes	Yes
SPIRAL II	In-flight		Yes (5)	Yes	Yes	No	No	Yes	No	Yes	No
GSI	In-flight		Yes (2)	Yes	Yes	No	No	Yes	No	Yes	No
FAIR	In-flight		Yes (5)	Yes	Yes	No	No	Yes	No	Yes	No
NSCL	In-flight		No	Yes	Yes	No	No	Yes	No	No	No
ISF (FRIB)	In-flight		Ye (2)	Yes	Yes	Yes (up to 12 Mev/u)	Yes	Yes	No	No	No
ATLAS	In-flight		No	Yes	No	No	No	Yes	No	Yes	No
ABEL (FRIB)	In-flight (400 kW)	Yes (2)	Yes	Yes	Yes (up to 15 Mev/u)	No	Yes	No	Yes	No	
RIBF	In-flight (1 kW)		Yes (4)	Yes	Yes	No	No	Yes	No	Yes	Yes

Table 2: Overview of worldwide activity in rare-isotope beam physics. The shadings of the table group together facilities at a common locations.

6.2.2

Particle Physics

Science

The driving motivation behind particle physics experiments is the desire to uncover the true nature of fundamental forces and particles. Our current standard model is believed to be an effective theory, which has a deeper underlying theory reachable in the next generation of experiments. In the electroweak sector, where great successes of the past decades have predicted and verified the unification of the electromagnetic and weak nuclear forces, precision measurements at the CERN large electron positron collider (LEP) and the Fermilab proton-antiproton collider (Tevatron) demand that there be either a light Higgs particle with a mass less than about 200 GeV or a physical system mimicking its interactions. At the same time, the requirement that the theory be stable even with a Higgs, as well as the observation of cold dark matter in the universe, compellingly point to new physics at the Terascale.[1]

In the flavour sector, a decade of increasingly precise measurements of the properties of heavy quarks has shown remarkable agreement with the standard model predictions, and we are now moving into an era of precise investigations of the neutrino sector. The demonstration by the Japanese Super-Kamiokande and Canadian SNO experiments that neutrinos flavours oscillate but that their masses are likely much smaller than those of the other elementary particles suggests that there are critical phenomena in particle physics which cannot be

1 The "Terascale" refers to energies of one trillion electron volts, or 1 TeV, where 1 electron volt is the energy an electron gains when accelerated across 1 volt. 1 TeV corresponds to 1000 proton masses. Viewed in terms of length scales, 1 TeV corresponds to probing distances of 10^{-19} metres, about 10,000 times smaller than an atomic nucleus.

explained by the standard model. This physics likely had a very significant role in cosmology. There are some hints that this new physics might be accessible to upcoming experiments. In the strong sector, the theory of quantum chromodynamics (QCD) has been successfully used to predict the behaviour of quarks and gluons at high energies observed at the HERA collider at DESY Hamburg as well as LEP and the Tevatron, but the lower energy regime, where they are bound into particles such as protons and neutrons, remains theoretically and experimentally challenging and requires further investigation.

While the case for physics beyond the standard model is strong, there is no clear indication of what form the new physics will take. There is no substitute for directly probing the energy regime where the physics lies, so Terascale colliders are the highest priority in international particle physics. The two projects directly relevant to the 2010–2015 timescale of TRIUMF's new Five-Year Plan are the Large Hadron Collider (LHC) at the CERN laboratory, and the International Linear Collider (ILC). One of the critical areas that might be probed by Terascale colliders is the connection of electroweak physics to dark matter; experiments at the SNOLAB laboratory in Sudbury, including the DEAP and PICASSO collaborations, seek to detect the remnant dark matter directly in the low-background, deep underground facility. A direct observation of remnant dark matter in the laboratory would be a spectacular confirmation of its existence. The intriguing nature of the neutrino makes experiments that measure its properties compelling, and precise measurement in long baseline neutrino beams of oscillations in the parameter range suggested by atmospheric and solar neutrino experiments is another high priority in international particle physics. Another top priority is the investigation of the possibility that neutrinos act at least partially as their own anti-particles, which could enable neutrinoless double-beta decays. The upcoming projects in the 2010–2015 timeframe include the Tokai to Kamioka (T2K) long-baseline neutrino project in Japan and the SNO+ experiment at SNOLAB seeking neutrinoless double-beta decays. Experiments at the JLAB facility in Virginia are designed to measure the properties of hadrons precisely, in the range of a few times the mass of the proton, providing direct experimental probes of hadron properties in regions difficult to predict with theory and also to perform precision symmetry tests in nuclear physics to search for physics beyond the standard model.

We are poised on the edge of a new era in our understanding of the most fundamental constituents of matter and their interactions. Canadians, with the support and leadership of the TRIUMF laboratory, are at the forefront of this international scientific endeavour.

Experiments

ATLAS Physics at the CERN LHC

The Large Hadron Collider will define energy frontier physics for the next decades. Discoveries and measurements made at the LHC will determine whether higher energies or precision measurements of the new physics are needed as the next step. Canadians have been heavily involved in the construction and commissioning of the ATLAS detector at the LHC, and are well positioned to lead its physics studies. TRIUMF is a natural focal point for physics analysis in Canada for particle physics experiments. The laboratory

can host faculty and students from Canadian universities, support meetings and workshops, and provide computing resources to Canadians. TRIUMF is also able to support a critical mass of user analysis support personnel. The anticipated LHC data accumulation profile, along with potential physics signatures observable with those data, is shown in Figure 1.

ATLAS physics analysis will require access to petabytes of data, CPU for analysis and simulation, and visualization tools. Physicists will access data using the Worldwide LHC Computing Grid (WLCG), including significant resources secured in Canada for Canadian ATLAS use beyond our commitment to shared WLCG resources. This will be a complex environment for performing physics analysis. Canadian coordination and user support beyond that typical of previous experiments will be essential. TRIUMF employs two ATLAS user analysis support people, funded currently from the CFI award for the Tier-1 centre. A TRIUMF scientist is also the ATLAS-Canada physics coordinator and hosts weekly Western Canadian ATLAS-Canada physics analysis phone meetings and coordinates the organization of tri-annual Canadian ATLAS physics workshops.

Maintaining a critical mass of scientists, faculty, post-docs, and students doing ATLAS physics analysis at TRIUMF will be key to the success of TRIUMF as a Canadian ATLAS analysis centre. TRIUMF is increasing the number of its ATLAS scientists with a primary focus on physics from one to three and is hiring a phenomenological theorist who will work with the ATLAS group. With this critical local mass in place, TRIUMF should naturally form a nucleus for ATLAS physics analysis in Canada. Providing office space and conference facilities to accommodate visiting Canadian ATLAS members will allow TRIUMF to provide this essential local support, enabling

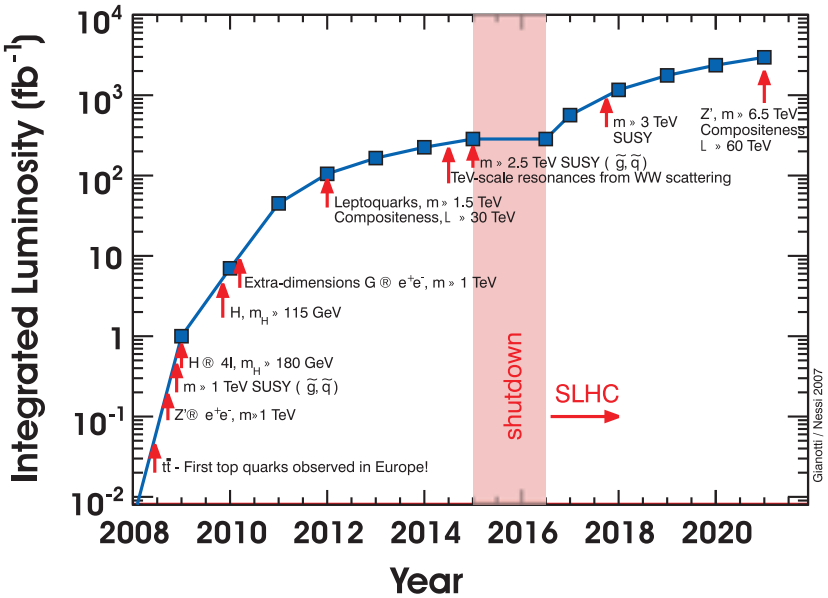

Figure 1: The anticipated integrated luminosity (data sample) ATLAS will accumulate for the next decade. Also shown are the thresholds where possible physics signals could be first observed. New physics signatures are particularly speculative, since we do not know which, if any, model is correct.

a major Canadian impact in the context of a globally distributed effort.

The ATLAS computing model uses a tiered system, allowing for scalability and distribution of resources around the world for the analysis of several petabytes (1 PB = 1,000,000 GB) of data accumulated by ATLAS each year. Data from the detector are first processed at a Tier 0 centre at CERN, and are then distributed to ten Tier-1 and about 50 Tier-2 centres for further processing and physics analysis. The Tier-2 centres are also used for detector and physics simulation, a critical part of all particle physics analysis.

The TRIUMF laboratory hosts the Canadian ATLAS Tier-1 computing and data analysis centre, which is part of the WLCG. Funding for the centre until 2011, including both hardware and personnel, was secured by ATLAS-Canada through the Canada Foundation for Innovation (CFI) Exceptional Opportunities program. In the 2010–2015 period, hardware renewal, personnel, and other operations tasks will be integrated into the TRIUMF program. While the annual hardware resource needs will grow steadily as the LHC acquires new data, the annual cost of these resources, including hardware renewal, will be approximately flat.

The TRIUMF resources required for ATLAS physics can be split into two categories:

- Canadian ATLAS Physics Analysis Centre:
    - Visitor desk space for a minimum of ten people, beyond TRIUMF staff. This will allow visiting faculty, post-docs and students to take full advantage of the opportunity of working with TRIUMF scientists and user support people, making TRIUMF a true centre of ATLAS analysis activity in Canada.
    - Meeting room space equipped with video conferencing ability is extremely limited at TRIUMF. In practice, it is difficult to use space for many ATLAS meetings, and impossible to host a few-day long workshop that requires teleconferencing ability. A dedicated meeting room equipped for teleconferencing would enormously increase the potential for TRIUMF both to host and engage in ATLAS physics activities.
    - A Tier-3 computing cluster for both TRIUMF personnel and visitors. These resources are not easily funded by either NSERC or CFI, and most universities are funding such facilities from other sources (including startup and other university funds). A minimal initial facility for TRIUMF personnel use would cost about C$25,000, and a facility for visitors would double that to C$50,000. The facility would need renewal over time.
    - The recent TRIUMF scientist hires will make a significant improvement in the local physics effort, more than doubling the TRIUMF scientist commitment to ATLAS physics. Adding two TRIUMF-funded contract-limited research fellows to support the regional analysis centre would make a significant increase in the physics output of the TRIUMF laboratory ATLAS group and its ability to lead Canadians in ATLAS. This would also provide a significant opportunity for TRIUMF to engage in the training of excellent physicists between the graduate student and faculty stages.

- Tier-1 Data Analysis Centre:
  - The precise computing requirements needed for the ATLAS Tier-1 centre are very difficult to estimate many years in advance. The computing resource needs are increasing approximately linearly with time, while the costs per unit are dropping. Personnel costs remain approximately constant. The current CFI Exceptional Opportunities Fund (EOF) award will provide sufficient funds to support the ATLAS Tier-1 centre through 2011. During the 2010–2015 period, the Tier-1 hardware estimated cost is C$8.2 million, including renewal of older systems, if we maintain our full ATLAS Tier-1 centre including resources dedicated to Canadian use.
  - Appropriate space with cooling and accessible electric power is also required. Room refurbishment to house the computers until 2015 will cost C$1.5 million.
  - The centre's operations costs for consumables, including power, will be about C$1.6 million.
  - In addition to computing hardware, the operations costs of the centre include personnel. These range from technical personnel such as system administrators, database and network experts to user analysis support personnel. Ten highly qualified technical experts are required to operate the Tier-1 centre, in addition to physicist managers.

T2K at J-PARC

The Japan Proton Accelerator Research Complex (J-PARC) accelerator will provide high-intensity neutrino beams to the T2K experiment starting in 2009, ramping up to full initial intensity using a 0.75 MW proton beam. During the following 5 years, the accelerator will continue to increase intensity while the experiment searches for $\nu_\mu \rightarrow \nu_e$ oscillations and measures the neutrino mixing angle θ_{13}, which is not known from solar and atmospheric neutrino measurements. If θ_{13} is sufficiently large, it may be possible to make a meaningful search for charge-parity (CP) symmetry violation by measuring the conjugate process with anti-neutrinos using an upgraded-intensity proton beam of 4 MW.

T2K construction is expected to be completed by the end of the current TRIUMF five-year planning cycle. Ongoing resources will be required from TRIUMF physicists for data acquisition support. The top priority for T2K during the 2010–2015 period will also be the extraction of physics. While the global distribution of data will not make distributed analysis coordination as severe for T2K as for ATLAS, it is still critical for TRIUMF to provide an infrastructure base for Canadians leading T2K physics analysis. Maintaining a critical mass of physicists at TRIUMF will also be a key for keeping a Canadian base for T2K physics analysis. TRIUMF will also become the analysis centre for T2K Canada, storing about 100 terabytes of data. While smaller than the Tier-1 centre, the scope is similar to the LHC physics analysis centre at TRIUMF.

SNOLAB Detectors

SNOLAB's ultra-low background places it centre stage in two quests: on the cosmic scale for interstellar dark matter and on the microscopic scale for neu-

trinoless double-beta decay. Astrophysical measurements indicate that 80% of the matter in the universe is "missing," that is, we can see its gravitational effects but it does not emit any heat or light. This "dark matter" is hypothesized to be the stuff that shapes the destiny of the universe, and yet we have no idea what it really is.

Experiments at SNOLAB will search for hypothesized rare interactions between dark matter and normal matter. On the microscopic end of the spectrum, neutrinoless double beta decay probes the very nature of antimatter. Advanced theories of particle physics and the Big Bang suggest that the neutrino particle may have a special nature: it might be its own antiparticle. Answering this question about the neutrino could reveal new insights into why the modern universe is predominantly occupied by matter (including dark matter!) rather than anti-matter. The initial program of SNOLAB will likely include experiments that focus on direct detection of dark matter (DEAP/CLEAN, PICASSO, Super-CDMS) and neutrinoless double-beta decay (SNO+, EXO).

SNOLAB was constructed with C$50 million from CFI for capital costs; a series of negotiations with NSERC, CFI, and the Ontario provincial government have secured annual operating costs of $C6M through 2009 and even to 2012 assuming federal investments continue. DEAP/CLEAN, SNO+, EXO and PICASSO have received NSERC funding for advanced prototyping, and all three are preparing CFI or NSERC proposals requesting construction capital.

In the near term, there are several projects for SNOLAB that would benefit enormously from on-hand TRIUMF expertise. The highest priority items include:

- Engineering and finite element analysis of the rope hold-down system for SNO+, and ensuring that the acrylic vessel is able to withstand the external pressure without buckling;
- Design and installation of electronics for the DEAP/CLEAN detector;
- Engineering and construction of the glove box and calibration manipulator system for SNO+;
- Liquid argon cryostat and cryogenic engineering for DEAP/CLEAN;
- Design, construction and qualification of the Alberta Low-Radon Laboratory (for DEAP/CLEAN and SNO+);
- Temperature control and hydraulic pressurizing system for PICASSO;
- Readout electronics for PICASSO;
- Shielding, pressure vessel design, for EXO; and
- Electronics/DAQ design for EXO.

At this stage of SNOLAB experiments, the primary need is for engineering and physics design expertise. As the experiments move into a construction, commissioning, and operating phase additional support in the form of shop time and technical expertise will be required. Estimates have been made of the amount of effort required on an ongoing basis. For the main Canadian efforts (PICASSO, SNO+, DEAP/CLEAN, EXO, CDMS) this will require the full-time equivalent of three scientists, three engineers/draftsmen and six technical support people.

ATLAS Upgrades, ILC R&D and other compelling projects

ATLAS Detector Upgrades

The initial ATLAS detector, set to begin collision data-taking in 2008, has largely completed installation and is being commissioned. It is expected to operate until approximately 2015, accumulating significant data sets for measurements of standard model processes at high-energy scales and searches for physics beyond the standard model. By about 2015, some parts of the LHC and the ATLAS detector will have suffered significant radiation damage and will need replacement; even with a fully working detector, the gain in experimental statistics from continued running at the same rate would be modest. What we foresee is an increase in the LHC interaction rates by an order of magnitude and corresponding upgrades to ATLAS to handle these higher radiation doses and detector occupancies. The primary upgrades for the LHC itself will be in the final focus region, achieving smaller beam spots by redesigning the collision optics, including adding magnets inside the experiments themselves. The ATLAS upgrades for the Super LHC (SLHC) will likely take place at the same time as the accelerator work to keep the period without physics data-taking as short as possible.

The upgrades needed to continue ATLAS operations in the SLHC era will be extensive. The entire tracking system near the beam intersection point will need to be replaced, including both the detector particle sensors and their readout electronics. This is particularly challenging because the new systems will need approximately an order of magnitude more active elements in order to cope with the extremely high occupancies expected at the SLHC, but the services (cooling, front-end readout electronics, cables) will have to fit into the same space. In addition to the tracking upgrades, the energy-measuring calorimeter systems nearest to the beam axis may see rates beyond their maximum operational values, and new detector systems and readout electronics may be required. The outermost ATLAS muon system will be difficult to operate due to large numbers of interactions from the increased numbers of low energy neutrons created at the SLHC, and technologies for either reducing the number of neutrons or coping with the high rates will be required. It took about five years of research and development (R&D) to develop technologies for the initial ATLAS detector, and another ten years to construct and install the full system. Taking advantage of our expertise from building ATLAS, we plan to compress that time frame to about three years of R&D and five years of construction and installation for ATLAS upgrades in order to be ready for ATLAS operation in the SLHC era.

Canadian groups made leading contributions to the design, construction, installation, and commissioning of the ATLAS liquid argon (LAr) calorimeter system, with critical leadership from the TRIUMF laboratory and the support of TRIUMF infrastructure for the contributions made from Canadian university groups. For ATLAS upgrades for the SLHC, several Canadian contributions are being considered, all of which require strong support from TRIUMF. NSERC has provided an initial one-year grant for R&D leading towards ATLAS upgrades, supporting, in particular, R&D for new technologies for high-rate calorimetry and high-rate pixel tracking detectors.

The LAr endcap calorimeters operate in a region with intense radiation and high particle fluxes. At the SLHC, the liquid argon itself may boil, critically

reducing the effectiveness of these Canadian-built detectors. One option being considered is placing a very-high-rate calorimeter in front of the LAr endcaps. This could effectively shield the LAr endcaps from the highest particle rates while recovering some of their measurements needed for ATLAS physics. The TRIUMF group is actively engaged in studies of the environment in this detector region during SLHC running, and in R&D for technological alternatives for a very-high-rate calorimeter. The ATLAS Hadronic Endcap Calorimeters (HEC) have preamplifiers located in a high-radiation area. It is not known if they will survive to SLHC fluxes. TRIUMF is also studying new technologies that could be used to replace these electronics.

Canadian groups are also strongly interested in efforts to upgrade the ATLAS inner detector tracking systems, which will need complete replacement after about three years of full-LHC-luminosity running. R&D is ongoing on the use of chemical vapour deposit (CVD) diamonds in the ATLAS pixel detector upgrade, led by Canadian groups. CVD diamonds have radiation and thermal properties that may allow the most radiation hard detector using the least material of any of the current options. Canadians are also engaged in efforts to build new front-end readout electronics for the ATLAS upgraded silicon tracker (SCT) system. Critical to this effort is the development of the expertise for ASIC microchip design and development at TRIUMF.

The total infrastructure support for ATLAS detector upgrades that will be requested from TRIUMF depends on the technologies chosen and the Canadian involvement. If all currently foreseen projects proceed, about four engineers and four technicians (half mechanical, half electronic) plus about three designers would be required at a relatively constant activity level from 2010–2015.

International Linear Collider Detector R&D

Research and development for detectors for the ILC have been ongoing for more than a decade. Experience from the Large Electron Positron Collider (LEP) provides considerable guidance for the physics exploitation of a high-energy e^+e^- collider, but the goals set for ILC detectors are much more ambitious. The ILC detectors need to have ten times better momentum resolution, two times better jet energy resolution, and superb vertex resolution using much less material. For many years, the worldwide ILC detector R&D effort focused on individual detector subsystems (vertex detector, large volume tracker, electromagnetic calorimeter, hadronic calorimeter, and muon detectors). More recently, four detector concept groups have formed to develop optimized full detector systems, and the preliminary designs were included in the reference design report for the ILC. To be in step with the accelerator planning, a process has begun to prepare two engineered detector designs by 2010. A call for letters of intent to produce an engineering design report for an ILC detector has been made. From the submissions, two detector concept groups will be asked to go forward to the engineering design phase.

Canadians have made significant contributions to the ILC detector R&D over the past decade. The initial efforts focused on improving the intrinsic precision of time projection chambers (TPCs) necessary for ILC detectors to achieve their momentum resolution goals. The key element was to replace wire grids with micropattern gas detectors (MPGDs) such as gas electron multipliers and Micromegas devices. Prototype TPCs were built in Canada with MPGD read-

out and were operated at TRIUMF, DESY (Germany), and KEK (Japan). These were the first tests that demonstrated that the precision goals can be reached with this technology in strong magnetic fields. The MPGD TPC is now a leading candidate for the central tracker for the ILC detectors. Canadian ILC TPC efforts have been growing; today they include calibration systems, chamber gas systems, readout electronics, and overall system integration and engineering. Canadians are recognized international leaders in the ILC TPC design groups, including global coordination roles at the highest levels.

Canadians have more recently become involved in hadron calorimetry for the ILC. The requirement for fine segmentation in the hadron calorimeter to have good particle flow jet energy resolution is challenging. Canadian efforts are currently focusing on the readout of fine-grained scintillators for ILC hadronic calorimetry using silicon photo-multipliers (SiPMs).

The total infrastructure support for ILC detector work that will be requested from TRIUMF depends on the ILC timescales, technologies chosen, and the Canadian involvement. If all currently foreseen projects proceed, and the ILC construction proceeds according to a technically limited schedule, about five engineers and five technicians (half mechanical, half electronic) plus about four designers would be required at a relatively constant activity level from 2010–2015.

JLAB, SuperB and other projects

In addition to large-scale projects, TRIUMF has a strong history of providing infrastructure for particle detector R&D and construction for projects of smaller scales. The experience of TRIUMF engineers, designers and technologists has made contributions by university researchers to detectors at other labs possible at levels beyond those by the universities alone. Small contributions from TRIUMF can have a significant impact.

One such recent project was the central tracking chamber for the BaBar experiment at the Stanford Linear Accelerator Center B-Factory. TRIUMF provided a large clean room and experienced technical staff making the project possible. Canadians have led the physics output of several BaBar areas, including seminal results in tau-lepton physics and searches for new physics in rare *B*-meson decays. In 2010–2015, a strong team of Canadian researchers from the University of Victoria, UBC, Carleton University and McGill University may be involved in the construction of the detector for the "Super B-Factory" in Italy. While this project is not yet approved, its relatively short time scale would require detector construction to be completed during the upcoming Five-Year-Plan period. The Super B-Factory would probe to several orders of magnitude higher sensitivities than BaBar, possibly into the regions where new physics might be observed.

Canadian physicists have also played leading roles in the U.S. Thomas Jefferson National Accelerator Facility (JLab) program since its inception. In the coming decade, the JLab program will be centred on a significant enhancement of its capabilities through the "12 GeV Upgrade". Canadian subatomic physicists are already in leadership roles in this program, including:

- GlueX: a search for hybrid mesons predicted by QCD (Regina, Alberta);
- Experiments in Hall C to study QCD scaling (Regina);

- Gep-15: the measurement of the proton form factor to $Q^2 = 15\ GeV^2$ (St. Mary's); and the
- 11 GeV Möller experiment (Manitoba, TRIUMF, UNBC, Winnipeg).

The first three are fully approved parts of the JLab 12 GeV scientific program, while the fourth will occur over a longer time, with a letter of intent now being written. TRIUMF infrastructure resources will be critical to the success of this effort, as they have been for the ongoing JLab program discussed in Section 4.2.2.5. Relatively modest contributions from TRIUMF will enable the continued leadership of Canadians in this program.

The total infrastructure support for other detector projects such as SuperB and JLab experiments that will be requested from TRIUMF will be relatively modest. Support levels around 2 FTE per year including engineers, designers and technicians, similar to previous periods at TRIUMF, will be typical.

Accelerators

Super LHC

The LHC will collide counter-rotating proton beams at centre-of-mass energies of 14 TeV, probing well into the Terascale regime. The LHC accelerator has been under construction for more than a decade, and first proton collisions are expected during 2008. The LHC takes advantage of the existing CERN accelerator infrastructure for its initial acceleration and injection chain, and the collider itself is built inside the existing 27 km circumference tunnel from the LEP facility. The LHC makes extensive use of superconducting magnet technology, which is used to generate the extremely large magnetic fields needed to bend the high-energy proton beams and steer them through the accelerator ring. The LHC bending dipole magnets have magnetic fields over 8 Tesla, about an order of magnitude stronger than the strongest permanent magnets. By circulating the proton beams, it is possible to use the same radio-frequency cavities over and over again to accelerate the bunched beams to high energy and, once full energy is achieved, repeatedly collide the same bunches of protons.

Once the LHC has begun physics operation, there will be a strong focus on exploiting the facility and extracting physics at the Terascale. The highest priority for the accelerator will be to consolidate and upgrade the reliability of its injection chain, some of which is 50 years old. The CERN European member states allocated 240 million Swiss Francs of new funds in June 2007, with a top priority of starting these upgrades. Combining those resources with international contributions, CERN plans to replace the earliest parts of the LHC injection chain including the linear accelerator (LINAC), booster accelerator, and the proton synchrotron (PS). These upgrades have begun and will continue through about 2015 and will allow, together with upgrades to the LHC itself, significant increases in the data-taking rate of the facility, eventually reaching an order of magnitude higher rates than the nominal LHC levels. The LHC and upgraded facility, referred to as the "Super LHC" or SLHC, will have the highest direct energy reach of any currently planned project. A sketch of the LHC injector system is shown in Figure 2.

Canada, through the TRIUMF laboratory, has made significant contributions to the LHC. The expertise of the TRIUMF accelerator group in radiation-toler-

ant magnets, fast electrostatic kicker systems, and power supplies made it possible to develop and construct the Canadian LHC contributions in Canada, fostering Canadian industry and training Canadians in these high-technology areas. For the SLHC, TRIUMF's developing expertise in superconducting radiofrequency (SRF) technology and close collaboration with PAVAC Industries Inc. makes key contributions to the SLHC possible. In particular, the upgrades to the LHC injection chain will include a high-intensity superconducting proton linear accelerator (SPL) with components well matched to TRIUMF's SRF group. The expertise of the TRIUMF accelerator group in the dynamics of high-intensity proton accelerators is also well matched to optimizing the new CERN Proton Synchrotron design, PS2.

SLHC-related accelerator contributions will require about one to two FTE per year of time from accelerator physicists, with contributions from three to four different people. TRIUMF would also work with PAVAC to design, fabricate, and supply a significant fraction of the superconducting RF cavities in the lower energy (so-called "β<1") section of the SPL. The expected capital costs for the cavity construction depends on the number of cavities produced in Canada; for scale, half the SPL β<1 cavities could be constructed in Canada for about C$4 million.

Superconducting RF development for the ILC

The ILC is a planned next-generation electron-positron (or anti-electron) collider. Unlike the LHC proton collider, the ILC will accelerate the electrons in a straight line. This is necessary because the much lighter electrons lose large amounts of energy due to synchrotron radiation when steered by magnets, and a very high-energy electron beam in a circular accelerator will lose more

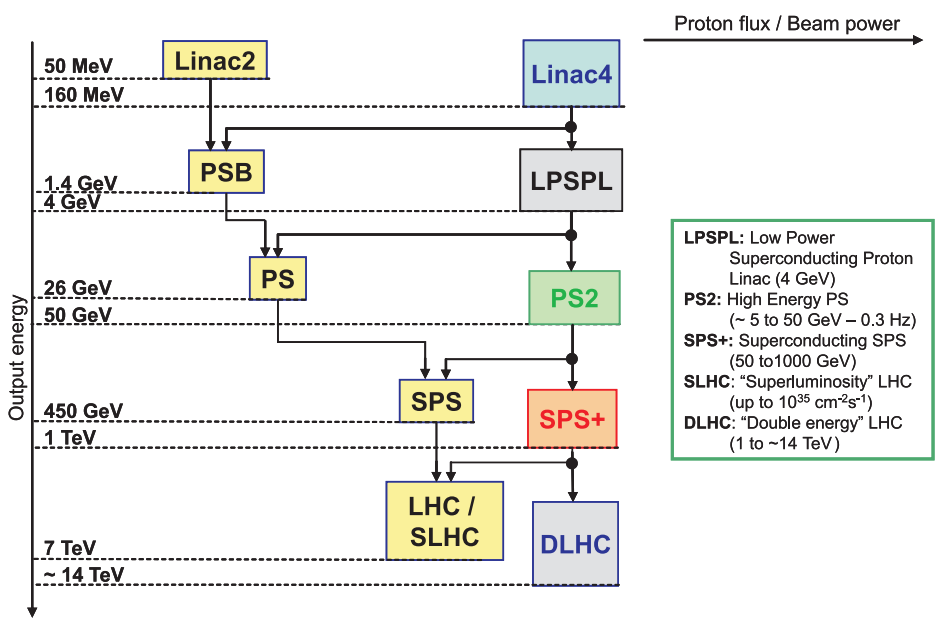

Figure 2: The current LHC injector chain is shown on the left, and the progressive new accelerators planned to consolidate the operations are shown on the right. The superconducting SPL and high intensity PS2 are ideal candidates for TRIUMF.

energy than can be practically replaced. The linear accelerator is a one-shot device, and large electric field gradients are required to accelerate the particles to energies that will allow probes of Terascale physics using a facility with a practical length. The baseline ILC design uses Superconducting Radio-Frequency (SRF) accelerator cavities with electric field gradients in excess of 30 million volts per metre (MV/m). The ILC will initially have centre-of-mass energies of about 500 GeV.

There is now a reference ILC design, and a detailed engineering design will be completed by 2010. Following this, the ILC funding, site selection and international construction partnerships will be clarified, and construction will start. A realistic success-driven schedule places first ILC particle collisions at the end of the coming decade. The period 2010–2015 will see the completion of R&D for the ILC component fabrication, particularly the superconducting RF acceleration cavities, and hopefully the start of major construction. While Canada is a full member of the ILC global design effort, the contribution to ILC accelerator R&D has so far been limited to a few small projects. With the adoption of SRF technology for the ILC baseline design, expertise from TRIUMF could allow Canadians to be strong contributors to this effort. The acceleration of charged particles in the SRF cavities being developed for the ILC is shown in a computer simulation in Figure 3.

The ILC is likely to be focused on R&D through most of the 2010–2015 period, although a technically limited schedule allows construction to start in the later part of the period. There are significant synergies across the TRIUMF and Canadian e-linac, SPL and ILC R&D efforts, including the collaboration with PAVAC. ILC accelerator efforts at TRIUMF will require an additional effort of about one to two FTEs per year from accelerator physicists.

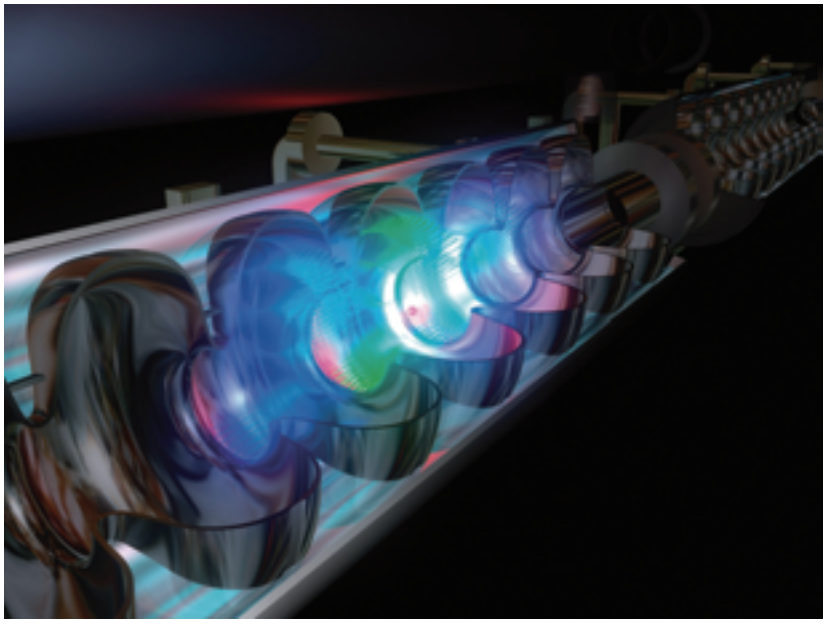

Figure 3: A computer simulation of the RF fields accelerating a charged particle in an ILC SRF cavity is shown. Figure courtesy DESY Hamburg.

6.2.3

Nuclear Medicine

TRIUMF's nuclear-medicine program is unique. The availability of outstanding accelerator (cyclotron) physics and chemistry, an outstanding ligand chemistry group, excellent PET scanning and imaging expertise, combined with established collaborations with high-quality programs in neurology with the University of British Columbia (UBC) and oncology at the BC Cancer Agency (BCAA), result in a program that has few, if any equals. The TRIUMF five-year vision proposes to provide vigorous support to the program as it unleashes its full energies on a multi-partner initiative in nuclear medicine.

Introduction

Medical imaging allows physicians and biomedical researchers to examine non-invasively the living human body in health and disease. Traditional imaging techniques such as computed tomography (CT) and magnetic-resonance imaging (MRI) are widely used to monitor human disease; however, many diseases do not cause disruption of macroscopic physical structure but instead alter functional relationships within and between organ systems. Functional imaging enables metabolic change to be visualized. Current PET ligands allow for the quantitative visualization of non-specific functions such as cerebral blood flow and glucose metabolism, neurotransmitter synthesis and storage, and neurotransmitter receptors. While extremely useful, such techniques are limited by the relative paucity of well-characterized specific ligands. There are very few tools to image cellular processes downstream to neurotransmitter receptors. Such processes, including induction of immediate, early genes or of transcriptional regulation, may play a key role in central nervous system disorders.

The Five-Year Plan proposes a major initiative at TRIUMF in nuclear medicine. This initiative will build on TRIUMF's strong points in molecular

DEAN KARLEN

R.M. Pearce Professor of Physics, University of Victoria

Dean Karlen, completed his B.Sc. at the University of Alberta in 1982 and Ph.D. at Stanford University in 1988. His Ph.D. thesis,"A Study Of Low Q2 Radiative Bhabha Scattering," described a new calculation and measurement of electron-positron scattering undertaken with the Mark-II detector at SLAC. In 1988, he returned to Canada to join the team at Carleton University, led by Robert Carnegie, building the vertex detector for the OPAL experiment at the Large Electron Positron (LEP) collider at CERN.

In 1989, Dr. Karlen joined the Faculty and moved to Geneva for the first three years of the LEP program. At CERN, he served as physics coordinator for the OPAL experiment, a collaboration of more than 400 physicists. After the great success of the LEP program, Karlen began participating in studies for the successor to LEP, the International Linear Collider (ILC).

In 2002, Karlen moved to the University of Victoria to become the R. M. Pearce Professor of Physics, a joint appointment with TRIUMF, and lead efforts to develop precision time projection chambers (TPCs) for the ILC. In 2003, he joined the T2K-Canada group.

Dr. Karlen has led the T2K TPC project since its inception, drawing on the many talents and resources of the detector group at TRIUMF, along with other faculty, staff, and students at the University of Victoria, UBC, and many collaborators in Europe. In addition, he is leading the Canada Foundation for Innovation funding application for the proposed electron linear accelerator at TRIUMF. ■

imaging, radionuclide research, and radiotracers; catalyze a national network for the development of cyclotron-based medical isotopes and radiotracers; and strengthen existing partnerships with TRIUMF's partners in life sciences. The nuclear-medicine initiative has the following elements.

- Upgrade and transformation of infrastructure
- National network for radiotracer development
- Focused research and development of microfluidics
- Expanded cyclotron targetry for PET isotopes
- Innovative techniques for mining novel radionuclides, especially from the new e-linac accelerator proposed at TRIUMF
- Strengthened existing partnerships.

This combined initiative will meet the demands of the existing program that is growing rapidly with strong, externally-funded projects with a need for facilities that meet regulatory oversight. It will also allow TRIUMF to address the needs of emerging programs wanting access to molecular imaging. Finally, it will support the national effort to work cooperatively in molecular imaging.

Major Initiatives

There is growing evidence that Parkinson's disease and other major disorders may result from impaired cellular protein handling. To better understand such processes, there is an urgent need to visualize gene and/or protein expression *in vivo*. Imaging of protein expression would essentially depend upon labeling of specific antibodies. While numerous technical hurdles may be associated with the development of agents designed to image gene expression, there is ample evidence of feasibility. The Nuclear Medicine Program will therefore pursue an approach in which oligonucleotides labeled with a positron emitter can be used to assess the degree of mRNA expression. This approach is essentially *in situ* hybridization performed *in vivo* and takes advantage of skills and experience already in place within the research group. The approach can theoretically be applied to the study of any gene of interest and will allow unrivalled diversity and specificity.

While the infrastructure provided by the collaboration between TRIUMF and the Canadian research community will focus on the labeling of functionally specific markers such as oligonucleotides and peptide fragments, new small molecule development will also be extended to take advantage of their ability to serve as surrogate markers for other processes. To enhance throughput for production of short-lived radioactive tracers, researchers will develop lab-on-a-chip technology. This technology will increase production efficiency by reducing the amount of starting materials and the time for chemical synthesis. Removal of impurities by chemical separation, which will lead to enrichment of the radiotracers, will also be accomplished on the same microchip, resulting in high integration capability. This lab-on-a-chip technology will allow for many production runs of different markers to feed into the scanning schedule to address a variety of biological questions on the array of scanners across the Network's community.

Upgrade and Transform Infrastructure

TRIUMF's role in the Canadian nuclear medicine community is different than its role in the subatomic physics community. In partnership with the Pacific Parkinson's Research Centre (PPRC) and the British Columbia Cancer Agency (BCCA), TRIUMF's Nuclear Medicine Program represents a research output at the forefront of nuclear medicine techniques. There is growing national interest in medical isotopes as evidenced by the proposal submitted to the Canada Foundation for Innovation (CFI) concerning cyclotron-produced radiotracers as well as the public debate surrounding the operation and possible upgrade to the Chalk River nuclear reactors used for isotope production. An expansion of the TRIUMF infrastructure in this area will allow the lab to take a leadership role in this wave spreading across Canada.

TRIUMF's involvement in the production of radiotracers for human experimentation requires an upgrade to meet Health Canada's Good Manufacturing Practices Guidelines for operation beyond the near term. This upgrade will allow for an expansion of TRIUMF's partnerships with the both PPRC and BCCA. Recognizing that radiotracer development in many ways mirrors the complexity of pharmaceutical development, a facility is needed that will streamline and speed the development pathway by pursuing a key innovation in process optimization rather than seeking to focus simply on developing a new narrow line of tracers. To exploit fully this opportunity, a new clean room facility containing six hot cells and a laminar flow hood is proposed. The present TR-13 cyclotron will be relocated to the basement of a new chemistry laboratory that would include a dedicated vault for the cyclotron.

It is proposed that these new facilities will be housed in new laboratory space within the Health Sciences Building under discussion with the province of British Columbia. This infrastructure upgrade will transform TRIUMF's nuclear medicine program and allow it to drive the development of the next generation of radiotracers for use in functional imaging for both basic and clinical research, with a focus on neuroscience and oncology.

Radiotracers

The development of new biomarkers for functional imaging will focus on the synthesis of radiotracers based on large molecules such as peptides, peptide fragments, oligonucleotides, and antibodies. Attaching a radionuclide to an organic entity requires the proper conditions to be rapid and high yielding. New approaches are being tested that will be used to fast track the development of a range of radiotracers that can be evaluated in a clinical setting. These radiotracers will not only address medical needs that have been defined within existing clinical research programs, but also serve to drive the development of a platform process for radiotracer development that will be equally applicable to the next generation of novel radiotracers targeted at other diseases.

The idea is to generate an imaging agent precursor (*e.g.*, peptide, folate, oligonucleotide) that can be labeled in a single step using aqueous ^{18}F to provide for high specific activity with minimal post-labeling work-up, much like with ^{64}Cu wash-in labeling of DOTA-linked conjugates. The novelty of this approach to labeling biomolecules with ^{18}F involves the formation of either boron-fluorine bonds or silicon-fluorine bonds instead of the hard-to-generate carbon-fluorine bond.

To exploit these opportunities, a proposal is being submitted to the Canada Foundation for Innovation (CFI) New Initiative Fund. With UBC-TRIUMF serving as lead, the proposed Pan-Canadian Network (The Network) will capture all of the cyclotron-based radiotracer facilities and take advantage of their capabilities in a synergistic manner. The funding requested for TRIUMF will provide the infrastructure for the functional imaging programs at UBC and BCCA to be further developed and augmented. In particular, it will provide the infrastructure for development of a platform for high throughput generation and production of highly selective, targeted radiotracers that can be tested for proof-of-principle in a research setting. The aim is to identify candidates suitable for clinical evaluation in important human diseases, such as Parkinson's disease, cancer, and heart disease. The Network will address an internationally recognized need for the establishment of a comprehensive functional imaging program that integrates basic research on medial isotope production with precursor molecule identification and synthesis, as well as clinical-grade small scale manufacture for the assessment and clinical testing of resulting novel radiotracer candidates. We propose an innovative approach whereby microfluidics technology will be applied to the development of the next generation of radiotracers for functional imaging.

There are few places in the world where both the expertise and the facilities exist to facilitate the establishment of a fully integrated functional imaging program. The Network is poised to become one of them. TRIUMF will be a unique, comprehensive facility for radiotracer development combining the radiochemistry research and production expertise at TRIUMF with the translational and clinical expertise of the PPRC, BCCA, the Brain Research Centre (BRC), and other basic and clinical research departments. The Network will use TRIUMF's core facility, which is composed of multi-disciplinary researchers focused on the discovery, development, evaluation, and application of novel, relevant radiotracers and their production in a cost-effective and reproducible way to support basic research and clinical applications in nuclear medicine. Along with the rapid development and assessment of fundamentally important new radiotracers, these researchers will produce technical innovations with a high degree of commercial potential, provide wide ranging health benefits to a broad sector of the population and further the establishment of Canada as a world leader in functional imaging technology.

The Network is proposed to include the following partners with UBC and TRIUMF as the lead:

- Active cyclotron-based programs
  - McMaster University
  - Cross Cancer Institute
  - Montreal Neurological Institute
  - Ottawa Heart Institute
  - Université de Sherbrooke
- Emerging cyclotron-based programs
  - BC Cancer Agency
  - St Joseph's Health Care (London, ON)

    - Sunnybrook Hospital (Toronto)
    - Thunder Bay (ON)
    - University Health Network (Princess Margaret Hospital)
    - University of Calgary
    - Dalhousie University
    - University of Manitoba
    - Université de Montréal
- Terry Fox Research Institute
- Centres of Excellence for Commercialization and Research
    - Advanced Applied Physics Solutions, Inc. (AAPS), Vancouver, BC
    - Centre for Drug Research and Development (CDRD), Vancouver, BC
    - The Prostate Centre's Translational Research Initiative for Accelerated Discovery and Development (PC-TRIADD)), Vancouver, BC
    - Centre for Probe Development and Commercialization (CPDC), Hamilton, ON
- Private-sector companies
    - MDS Nordion
    - Siemens Medical
    - GE Healthcare
    - Edmonton Radiopharmacy Centre

As molecular biology unravels the various pathways for signal transduction and protein interactions, the targets for specific tracers has increased dramatically. The challenges the radio chemist faces are enormous. The development of a new probe (radiotracer) is akin to what large pharmaceutical companies deal with in their quest for new and better drugs. Canadian research centres are few and, in general, small, so our proposed new Network will help foster collaboration that will help each group benefit from the efforts of others. TRIUMF is the natural leader of this Network because of its strong connections to biomedical programs at UBC via both PPRC and BCCA. In addition, TRIUMF's expertise in accelerator science and technology and radiochemistry make it a crucial partner in any such national effort.

Microfluidics

The miniaturization of the radiochemistry that is used to prepare radiotracers has the advantage of higher yields, shorter reaction times, and higher purity, all of which provide for a more rapid translation from animal studies to human studies. This miniaturization, called a lab-on-a-chip, will initially focus on bringing our existing boutique of tracers to a scale that will allow simple, rapid production with minimal intervention. Chips will be designed to take advantage of the operations approach to labeling so that we can continue to exploit

the advances made in preparing new compounds as they appear in the literature.

The required equipment will be used to microfabricate the chips for conducting microscale chemical synthesis. After microfabrication, the chips will be tested for various mixing, chemical reaction, and separation steps. Subsequently, the chips will be tested with radiotracers.

The regional team of TRIUMF, PPRC, and BCCA will work with Simon Fraser University, University of British Columbia, and the University of Alberta's nanotechnology centre to lead Canada and the world in the development of microfluidic capabilities. Microfluidics has been widely recognized as a barrier to broad distribution of nuclear medical capabilities because laboratories traditionally require trained chemists, wet labs, and hot cells. TRIUMF's role in developing microfluidic technology is therefore driven by its broader program in nuclear medicine and the interests of its partners to develop and deploy a set of tools for national impact.

Targetry

The need for improved yields and specific activity for radionuclides used in PET imaging has always been a continual battle. Recent developments have pointed to the benefits of using ultra-high specific activity. The existing TR-13 cyclotron at TRIUMF was designed to operate at 19 MeV with >100 μA of protons circulating; however, it was situated in a public area with localized shielding that was not capable of providing the necessary radiation safety at the machine's design parameters. At present, operation is restricted to 13 MeV with target beam currents of less than 25 μA. While this situation is adequate for a narrowly focused program, the new program will require greater capacity for routine production as well as for the development of new target-chemistry systems. This greater capacity will be especially important for developing highly concentrated high specific activity ^{11}C where we would like to have multiple curies in very small volumes.

The Canadian nuclear-medicine community is typically situated at teaching hospitals, but there is increasing recognition of the need to couple members of this community with accelerator and radiochemistry experts found at physical science research centres. Relocating the present TR-13 cyclotron would allow TRIUMF to take the lead in this evolution of the Canadian nuclear medicine community. Canada has traditionally been a world leader in the development and supply of radionuclides for medicine, but there are indications that, if Canada does not redouble its efforts in medical isotope production, in a few years the United States, a long-timer customer of Canadian medical isotopes, will simply replicate the Canadian program and render the Canadian advantage obsolete (see Appendix F for more information).

Mining Radionuclides

The spallation/fission targets developed for the actinide-target program at ISAC provide the possibility of producing large quantities of radionuclides that may have therapeutic potential both as α-particle emitters and β-particle emitters. These radionuclides can have powerful therapeutic value based on their half-lives, decay-spectrum energetics, and particle type. For instance, alpha particles travel only a short distance in human tissue and deliver enough ionizing energy to break both strands of DNA and thereby ensure cell death. One futuristic vision proposes to deploy PET-labeled target molecules in the

human body with alpha-particle emitters as "seek and destroy" assassins for cancer. Pursuing this line of research requires access to radioisotopes produced from the actinide targets, both proton and photo-fission. Initial studies can explore the isotope mix produced in the spallation mix once the target has been removed. Once promising candidates are identified, the exploration can turn to assessing feasibility in terms of on-line extraction versus off-line chemical separation approaches.

This program would fit naturally into the nuclear medicine focus of the TRIUMF Nuclear Medicine Program. It would play to TRIUMF's strengths in this area and, in partnership with BCCA, would develop world-unique capabilities.

Strengthening Existing Partnerships

TRIUMF's nuclear medicine team is focused on continuing the existing collaboration with PPRC and building on the emerging collaborations with both BCCA's cancer biology research program and British Columbia's Centre for Drug Research and Development's (CDRD) burgeoning program on incorporating functional imaging into drug discovery research.

PPRC and Neurology

PPRC has an international track record of using state-of-the-art PET imaging techniques to study Parkinson' s disease. The research with the PPRC has been funded by grants from the Canadian Institutes of Health Research (CIHR), the Michael Smith Foundation for Health Research, the Pacific Alzheimer's Research Foundation and the Natural Sciences and Engineering Research Council of Canada (NSERC). Overarching the multiple specific projects that are incorporated into the PPRC team's applications are the following three basic questions:

1. What causes Parkinson's disease?
2. What are the underlying mechanisms that contribute to complications of advanced disease and long-term treatment?
3. How can we use Parkinson's as a model to understand better the neurobiology of dopamine and other monoaminergic systems in the brain, in health, and in disease?

1. What causes Parkinson's disease (PD)?

The TRIUMF Nuclear Medicine Program uses positron emission tomography (PET) to study the origin and progression of both sporadic PD and PD caused by dominantly inherited mutations. Compensatory changes in the dopamine (DA) system are being studied during early and preclinical stages of the disease using multiple tracers of the presynaptic dopamine system. In addition, we assess occupational risk factors for PD using a population-based, case-controlled design and investigate the contribution of potential risk-modifying genes.

2. What are the underlying mechanisms that contribute to complications of advanced disease and long-term treatment?

We are studying changes in dopamine turnover and their relationship to alterations in dopamine transporter (DAT) expression in PD patients with fluctuations in motor function as well as in a rodent model of PD and levodopa-induced dyskinesias. The aim is to determine whether changes in DAT expression are related to different dopaminergic therapies. Using PET, we assess the dopaminergic basis for depression in PD by assessing DA release in response to methamphetamine and compare depressed PD to non-depressed PD subjects, as well as depressed PD to non-PD patients with major depression and controls. We are assessing the effects of expectation on DA release and the placebo effect, and are assessing DA release and prefrontal cortical activation in PD subjects with pathological gambling. Alternate therapies that may have non-DA effects, such as retinal-pigmented epithelial cell implants and ECT, will be assessed in non-human primates.

3. How can we use PD as a model to understand better the neurobiology of dopamine and other monoaminergic systems in the brain, in health, and in disease?

Experimental studies on the role of DA in incentive motivation and its relationship to depression and expectation are being conducted using *in vivo* microdialysis and, related to human studies on depression, the placebo effect, and pathological gambling. The UBC-TRIUMF team will be pursuing methodologies to label oligonucleotides with positron emitters to study gene expression *in vivo* as described above.

In addition to the CIHR team grant activities, the UBC-TRIUMF nuclear medicine team works with the Mayo Clinic in Jacksonville, Florida to study dementia. Dementia is the commonest symptom of neurodegeneration and is estimated to affect approximately a half million Canadians. The major causes of degenerative dementia are Alzheimer's disease, Parkinson's disease, Lewy body dementia, and frontotemporal dementia. Although the clinical features and histopathology of these conditions are different, there is increasing recognition of clinical and pathological overlap. Individuals with one condition may develop both clinical and pathological features of another. Overwhelming support for the concept of overlap between syndromes and pathological heterogeneity is derived from the example of Parkinsonism due to mutations in the gene-encoding, leucine-rich repeat kinase 2 (LRRK2), in which the Lewy bodies typical of Parkinson's disease may or may not be present, and which may be associated with the pathological hallmarks of other forms of neurodegeneration, including progressive supranuclear palsy, frontotemporal dementia, and Alzheimer's disease.

The UBC-TRIUMF collaborative program will undertake a comprehensive examination of the relationship between cognitive impairment and motor dysfunction, using clinical, genetic, pathological, and neuroimaging approaches. We are studying two different familial forms of Parkinson's as well as frontotemporal dementia. In all three cases, both cognitive impairment and Parkinsonism occur, but the neuropathological and genetic substrates are different. The overarching hypothesis is that insights derived from understanding the genetic bases for these disorders will lead to the elucidation of a common pathway underlying neurodegeneration. Thus, the findings obtained from

these studies will have an impact on other neurodegenerative dementias, including Alzheimer's disease and will provide insight into mechanisms underlying sporadic neurodegeneration. Focus areas of the next few years will be:

- Presynaptic dopaminergic integrity can be assessed using [^{11}C]dihydrotetrabenazine (DTBZ; a marker for the vesicular monoamine transporter type 2 [VMAT2]) and [^{11}C]*d-threo*-methylphenidate (MP; a marker for the membrane dopamine transporter [DAT]), as well as 6-[^{18}F]-fluoro-L-dopa (FD). FD uptake is usually used to assess the decarboxylation of levodopa to dopamine. However, we have utilized longer than usual (four-hour) scan times to estimate dopamine turnover, and this approach will continue to be applied to the study of asymptomatic subjects with the conditions considered here.
- Dopamine receptors can be assessed using [^{11}C]raclopride (D2 receptor) or where appropriate [^{11}C]SCH 23390 (D1 receptor). While either study may be useful to determine integrity of post-synaptic receptors, the more common application here is to use a change in [^{11}C]raclopride binding to estimate dopamine release in response to medications or other stimuli, such as expectation of reward/therapeutic benefit. The TRIUMF-UBC team has extensive experience with this approach.
- Cholinergic activity is assessed in all demented subjects or subjects at risk for dementia using the acetylcholinesterase substrate N-[^{11}C]methylpiperdin-4-yl propionate (PMP) and shape analysis, appropriate for regions with low to intermediate levels of cholinesterase activity. The team has considerable experience with the use of this tracer in preliminary studies on PD with dementia and related disorders.
- Neuroinflammatory responses can be assessed where appropriate using the peripheral benzodiazepine ligand (*R*)-[^{11}C]PK 11195 that images activated microglia.
- The team will image amyloid/aberrant protein deposition using the ^{18}F labeled analog of the Pittsburgh B compound (PIB). ^{18}F is better suited than ^{11}C because of the kinetic properties of this ligand, which is a thioflavin analog. Although most published literature to date suggests that this compound is selective for fibrillar -amyloid, this is somewhat controversial, with unpublished claims that it may bind to other misfolded proteins. The other PET ligand that has been developed for amyloid imaging is 2-(1-{6-[(2-[F-18]fluoroethyl) (methyl)amino]-2-naphthyl} ethylidene) malononitrile ([F-18]FDDNP). This agent appears to bind to both plaques and neurofibrillary tangles. This compound has somewhat different properties from PIB and is likely to bind to at least some protein aggregates in disorders other than Alzheimer's disease. To date, there has been no direct published comparison of the properties of these two relatively recently developed tracers.

An important component of the PPRC-related research is the investigation of small animal models of disease with a dedicated small-animal imaging camera and related imaging expertise. The expansion of the TRIUMF nuclear-medi-

cine program will be able to take advantage of these skills when establishing its small animal imaging program dedicated to radiotracer development.

BCCA and Oncology

Leveraging TRIUMF's established skills and expertise, BCCA launched a highly successful clinical program in functional cancer imaging. Currently, approximately 3,000 patients per year benefit from PET scans using ^{18}F-FDG produced by BCCA staff at TRIUMF. BCCA has purchased a cyclotron which will be housed in its own facility and should be commissioned in approximately one year. With BCCA's recent creation of a research chair in functional cancer imaging and its purchase of a small animal micro-PET/CT scanner, TRIUMF sees the collaboration with the BCCA as a unique opportunity to expand the scope of its own life sciences program into cancer research. To achieve this, TRIUMF will kickstart a joint research program with the BCCA by providing isotopes for pre-clinical and clinical research, such as ^{18}F-Fluoroestradiol (for breast cancer imaging) and ^{18}F-EF5 (to image hypoxia). The addition of a cyclotron at the BCCA will provide greater capacity for isotope production, an alternate supply for some research isotopes, and another site for radiochemistry development in collaboration with TRIUMF.

Through joint grant-funded projects, the BCCA-TRIUMF team will expand ongoing initiatives to radiolabel organic macromolecules (peptides, proteins and oligonucleotides) of interest in basic and pre-clinical cancer research. Both institutions intend to maintain a close collaboration and to leverage each group's strengths (genomics, cancer biology and clinical imaging research at BCCA and target chemistry, radiochemistry and instrumentation research at TRIUMF) to build a world-class program in cancer imaging. As an example, BCCA has an active program to identify key genes associated with breast cancer, using high-throughput genome-wide siRNA screening. By selectively inactivating individual genes through thousands of iterations, researchers at BCCA are identifying key genes that are essential for breast cancer growth and proliferation. The proteins associated with these genes can then be identified and characterized, and complementary radioabelled probes can be designed to interact with these proteins for diagnostic or therapeutic purposes. Beyond additional opportunities to enhance the understanding of cancer biology through imaging probes, the expertise in target design and radioisotope production developed at TRIUMF will also be highly valuable to identify novel therapeutic isotopes to treat cancer.

The combination of world-class expertise in basic target research, radiochemistry, instrumentation research, molecular biology of cancer, preclinical expertise in imaging, advanced cancer therapeutics and clinical imaging research is unique in Canada and perhaps even in the world in terms of geographical and intellectual proximity.

Conclusion

TRIUMF's nuclear-medicine initiative requires specific human and technical resources. Three research chemists focusing on novel chemistry developments, large molecules, and microfluidics will be needed. A nuclear chemist will work with existing TRIUMF experts to explore innovations in radionuclide production methods. A molecular biologist or biochemist will focus on

the development of direct tracers. An imaging physicist will lead innovations in small-animal imaging. Supporting this team will require five technicians. It is expected that the expanded team will engage many more graduate students and up to six postdoctoral fellows, all supported by the external research grants of the investigators.

The fastest growing part of TRIUMF's program in the current five-year vision is the Nuclear Medicine Program. The opportunity to drive the nuclear medicine revolution sweeping Canada and, indeed, the world is too important to pass up. TRIUMF's combination of technical expertise, physical infrastructure, and enthusiastic partners make it a powerful player in Canada's efforts to improve the health and well-being of its citizens and to ensure a continued Canadian role in the global market for medical isotopes.

6.2.4

Molecular and Materials Science

Over the time span of the next Five-Year Plan (2010–2015), as detailed below, we will consolidate major expansions in the μSR facility, and, by implementing a second production target at ISAC, we will build on the success of β-NMR by significantly increasing available beam time and opening nanoscience opportunities to a wide pool of potential users.

Introduction

Almost every innovation in the history of humanity has been enabled by an advance in the understanding and control of materials, from the advent of metallurgy that heralded the Bronze Age to the development of solid-state electronics based on the properties of semiconductors such as silicon. The systematic scientific study of materials over the past several centuries has been a key aspect of modernization. At the dawn of this millennium, we face enormous global challenges due to overpopulation and overconsumption of energy and other limited resources. Central to our response to such challenges is the development of new technologies to improve efficiency and reduce the production of dangerous byproducts (including greenhouse gases such as CO_2), technologies that push the limits of our ability to control materials. Thus, more than ever before there is an urgent need for fundamental research into the physical and chemical properties of materials, and for methods of controlling their deployment in devices.

Although TRIUMF's principal focus has been the study of nuclear and particle physics, one of its major achievements has been the development of the muon spin rotation (μSR) facility and, more recently, the beta detected NMR (β-NMR) facility at ISAC, for materials research. These techniques use beams of light spin-polarized particles as ultra sensitive magnetic probes for fundamental studies of matter at the atomic (rather than subatomic) scale. With its Centre for Molecular and Materials Science (CMMS), TRIUMF is the only laboratory in the world to offer a broad community of chemists and materials scientists, with diverse research interests, the complementary tools of μSR and β-NMR in one integrated facility.

The use of radiotracers is well known in chemistry. Here the pathway of a radioactively labeled chemical species is followed through a chemical reaction to elucidate the reaction mechanism, for example, bringing to light important rate-determining steps. The use of the muon as a chemical radiotracer is based on its ability to mimic hydrogen by forming a special hydrogen-like atom called muonium with the positive muon (μ^+) playing the role of the atomic nucleus. Hydrogen is a very simple, common and extremely important atom in chemistry, particularly organic and aqueous chemistry. Moreover, its simplicity, stemming from its single electron, makes it highly amenable to accurate theoretical calculations. The information available by μSR is, however, much greater than from traditional radiotracers. This is because the radioactive decay of the muon is used not just to register the presence of the radiolabeled species but through a special property of the β-decay called parity violation, to obtain information about the state of the muon's spin at the time of decay, yielding information similar to nuclear magnetic resonance (NMR). NMR is a technique that uses the magnetic moments of stable nuclei with nonzero spin and is the basis of the medical diagnostic tool known as MRI (magnetic resonance imaging). The ability to extract magnetic resonance information via a "nuclear" detection scheme, *i.e.*, detecting the emitted high-energy β particles, yields an extremely high sensitivity. Together with its short lifetime (2.2 μs), this sensitivity makes μSR an ideal probe of short-lived transient species that are key intermediate players in critically important chemical reactions. These range from simple gas phase reactions that test our detailed fundamental mechanistic understanding, to organic reactions relevant in combustion and atmospheric chemistry; to the study of chemistry under the extreme, but highly industrially relevant, conditions such as nanoconfinement in zeolite cages, and the high temperature and pressure conditions of hydrothermal synthesis and supercritical fluids. Supercritical fluids present a particularly interesting example as the solvent media for chemical reactions. Unlike conventional solvents, their properties are continuously variable via temperature and pressure, leading to their wide industrial application as environmentally safe alternatives to conventional solvents (see Physical, Green and Materials Design Chemistry in Section 4.3.1).

Solid materials are the basis of all technology. A strong fundamental understanding of materials enables them to be engineered into devices. This is perhaps best illustrated by the research into the fundamental properties of formerly little known and little used materials known as semiconductors. This research led remarkably quickly to the 1947 invention of the transistor, a simple device that is at the heart of modern computer technology.*

* See http://download.intel.com/pressroom/kits/events/60th_anniversary/TransistorAnniversaryBackgrounder.pdf

Our knowledge of the materials science of semiconductors like silicon is now extremely well developed; however, there are an enormous number of other materials that are substantially less well understood, including a large number whose electronic and magnetic properties are qualitatively different from materials used in current technologies.

The possibility of using the properties of novel materials in radically new technologies, such as quantum computers and magnetic spintronics, has provided significant motivation to study materials that currently seem exotic, but may turn out to be tomorrow's "silicon." Such materials are structurally and compositionally more complex than simple elemental semiconductors, and to be considered for mass-produced technology, their properties must be well understood, and consequently controllable, before they can be considered for the engineer's material palette.

In this connection, one of the major streams of modern materials research is the problem of strongly correlated electron materials, where the electrons exhibit a collective behaviour, which in general is very different than for a system of independent electrons. There is currently no general understanding of such materials and our ability to predict their remarkable properties is quite limited. One particularly fertile class of unconventional materials is the transition metal oxides, where small interatomic overlap and localized *d* atomic orbitals lead to strong Coulomb interactions between electrons and a plethora of electronic ground states including: high-temperature superconductors; colossal magnetoresistive metals; insulating, conducting and semiconducting magnets; multiferroics (materials that combine the magnetic properties of ferromagnets with the dielectric properties of ferroelectrics), etc. A system of strongly correlated electrons is notoriously difficult to treat theoretically, so it is extremely important to use state-of-the-art experimental methods to guide theorists.

Scientists using the CMMS μSR facility continue to make key contributions in this global effort, using the extraordinary sensitivity of the muon as a local magnetic probe to study novel strongly correlated magnetic and superconducting materials (see Superconductivity (HTSC): Definitive Measurements and Tests; Strongly Correlated Systems and Quantum Phase Transitions in Section 4.3.1).

The sensitivity of μSR also makes it ideal for studying certain subtle, but critically important, problems in materials, such as the behaviour of hydrogen in semiconductors, where it is a common and very important impurity, and in potential hydrogen storage materials that can store high concentrations of hydrogen fuel in the relatively safe and convenient form of a solid solution (see Hydrogen–Materials Interactions in Section 4.3.1).

While still in its infancy, the β-NMR technique, as implemented at TRIUMF, has been shown to be an effective probe of nanostructured materials, where interfaces between dissimilar materials play a crucial role. There are very few other techniques capable of studying the depth-dependent phenomena that occur at heterointerfaces in solids.[1] Recent progress indicates there is significant potential in this regard: to use the unique capabilities of this new depth-resolved technique to study many phenomena at buried interfaces and

1 There are some competing probes, *e.g.* L. Giovanelli *et al.*, Appl. Phys. Lett. 87, 042506 (2005); T. Shigematsu *et al.*, Phys. Rev. Lett. 45, 1206 (1980); see also the reviews: G. Srajer *et al.*, J. Magn. Magn. Mat. 307, 1 (2006); M.R. Fitzsimmons *et al., ibid.* 271, 103 (2004), but the only other general-purpose depth-resolved local probe is LEμSR, see P. Bakulé and E. Morenzoni, Contemp. Phys. 45, 203 (2004).

near free surfaces that are of both fundamental scientific interest as well as of crucial practical importance in new generations of technological applications.[2]

The TRIUMF Centre for Molecular and Materials Science

The TRIUMF CMMS is one of four μSR facilities currently operating worldwide.[3] It has maintained its edge despite its lower proton intensity and significantly less support for its μSR facility than its principle competitor, the Paul Scherrer Institute (PSI), through continuing flexibility and innovation.

TRIUMF and its CMMS infrastructure and facility enable a wide range of users from around the world to carry out research in materials science and chemistry, yielding high scientific output (see Table 1). For example, between 2003 and 2007, containing 27 months of μSR beam time, TRIUMF μSR research generated 211 refereed articles (including 29 Physical Review Letters), 20 graduate theses, and 9 book chapters, including some of the most highly cited papers based on experiments carried out at TRIUMF.[4]

Through TRIUMF, Canada plays a leading role in the development of μSR and has reaped substantial scientific benefits and wide recognition for this success.

	Users	Spokespersons
Canada	100	111
USA	59	38
Japan	114	54
Europe	55	11
South America	5	0

Table 1: Profile of the CMMS users from 2003–2007, distinguishing users and experiment spokespersons.

The β-NMR facility at the CMMS is unique in the world. Only a few labs are capable of β-NMR, and none have a dedicated facility to study materials science with depth-resolved capabilities, nor with the beam intensities and spectrometer capabilities of the CMMS.[5]

At the present time, the only scientific competition is the low-energy muon facility at PSI because both methods can be used to probe the local properties of materials on a nm scale. However, the much longer-lived nuclear probes generated at ISAC are also complementary to the short-lived muon when it

2 See section 5 below

3 The others are the Paul Scherrer Institute (PSI) in Switzerland and the two-pulsed facilities: ISIS at RAL in the UK, and the KEK facility that is currently being relocated and expanded at the new J-PARC accelerator in Japan.

4 Thus far, in the 2003–2008 review period, there are 12 (μSR) and 4 (β-NMR) papers in Physical Review Letters. In the same period, there are 28 from the other 3 μSR facilities combined.

5 Other β-NMR labs include: ISOLDE, see http://ssp.web.cern.ch/ssp/experiments.htm for a list of experiments underway in materials science; Julich, see http://www.fz-juelich.de/iff/wns_nmr/; the NSCL in Michigan, see http://www.cem.msu.edu/~mantica/equip/bnmr.html.

comes to studying nanostructures. It is worth noting that the proposed RIA project in the United States, motivated by the ISAC model, includes a β-NMR facility for the study of materials. Other planned radioactive ion beam facilities (such as GSI-FAIR) are also considering implementing such facilities.

The CMMS is a user facility that provides infrastructure and support to the large number of scientists who come to TRIUMF to perform μSR and β-NMR experiments. It operates as other large-scale reactor/accelerator-based user facilities for neutron scattering,[6] synchrotron X-rays,[7] or high magnetic fields.[8]

Teams of researchers typically bring samples to TRIUMF for an experiment that consists of 6 days operating 24 hours a day, necessitating a very efficient, reliable, standardized, and user-friendly facility. A major role of the CMMS is thus to provide a specific, operating and fine-tuned spectrometer to the user at the start of each experiment, supporting the experimenters in carrying out their measurements.

Currently, the CMMS has 2 TRIUMF-supported scientists, 2 scientists supported through NSERC's Major Facilities Access (now MRS) grant and 3 technical support staff also funded by the latter. The MFA/MRS grant is obtained from NSERC by a consortium of 11 of the major Canadian users of the CMMS facility and is obtained independently of TRIUMF.

The CMMS is composed of two parts: a mature μSR program with a large international group of users and a newly developed β-NMR program. Plans for each of these streams are given in the following sections.

β-NMR

TRIUMF's ISAC facility represents a major recent success for the lab. It uses the primary proton beam from the cyclotron (BL2A) to produce beams of a wide range of radioisotopes. While ISAC works remarkably well, it can produce only a single beam at any given time. This presents a severe bottleneck with too many users competing for too little beam time. As such, this is the most important limitation to the exploitation of ISAC's unique capabilities. For example, over the period 1999–2006, β-NMR has received about 4 weeks of beam per year. This period is in sharp contrast to its main competition, the low-energy muon facility at PSI, which is now served by a dedicated high intensity muon beam line (μE4) with about 30 weeks of beam per year![9]

With such limited beam time at TRIUMF, there is no chance for β-NMR to grow into a broad-based research tool like μSR, serving a large user community with diverse interests. Moreover, there is little or no time for development of the technique that could optimize its use, and potentially enable new types of experiments. This situation is becoming particularly frustrating as the potential of β-NMR is revealed by the CMMS research team. If Canada is to exploit this unique scientific opportunity, a steady ^{8}Li beam is needed.

6 See the Canadian Institute for Neutron Scattering at AECL Chalk River, http://www.cins.ca/ or the Institute Laue-Langevin at Grenoble, http://www.ill.eu/.

7 See the Canadian Light Source, http://www.cls.usask.ca/, the Advanced Light Source at Berkeley http://www-als.lbl.gov/, or the Advanced Photon Source at Argonne http://www.aps.anl.gov/.

8 See the High Field Lab at Tallahassee, http://www.magnet.fsu.edu/ or the pulsed field facility in Toulouse, http://www.lncmp.org/.

9 The low-energy muon facility website is http://lmu.web.psi.ch/lem/

To make the leap to user facility, it is essential for TRIUMF to implement a parallel source of rare-isotope beams for ISAC such as the proposed photo-fission source. As β-NMR uses exclusively light isotopes, like ^{8}Li, a duplicate mass separator for such beams would not need the resolution required for higher masses and would thus be much simpler to realize. Lithium-8 is also convenient because it is produced readily via a thermal ionization source, so designing a new production target will pose few problems. β-NMR isotopes may be produced directly by photodisintegration, for example, using a beryllium target, via a ^{9}Be(γ, p)^{8}Li reaction. Using known cross sections, it is estimated that this process will yield at least as much ^{8}Li as the conventional ISAC target, even with a safe margin for uncertainties in radiation-enhanced diffusion of ^{8}Li [Haslam *et al.*, Can. J. Phys. 31, 210 (1953); Clikeman *et al.*, Phys. Rev. C 126, 1822 (1962)]. Alternatively, more beam time on the standard proton-driven ISAC target will become available as the load is spread between the two parallel operating targets. The new source will interface with the existing low-energy beam lines at ISAC, eliminating the need to duplicate the laser polarizer system and the β-NMR spectrometers (see Section 5.2.1.2).

With the proposed new source, we anticipate that the beam time available for β-NMR would quadruple before the end of the five-year planning period. Together with advances in the reliability of beam delivery and the implementation of the fast kicker that allows nearly simultaneous operation of the two β-NMR spectrometers, the available beam time will easily exceed the threshold for β-NMR to operate effectively as a user facility instead of a development project.

For a number of practical reasons, effort in β-NMR at TRIUMF has exclusively used ^{8}Li, which is abundantly produced in high yield at ISAC's simplest surface ionization production target. There is substantial motivation for developing other β-NMR beams. For example, the spin 1/2 isotopes ^{11}Be, and ^{15}O, having zero electric quadrupole moment, are pure magnetic probes like the muon. Thus, unlike ^{8}Li, the β-NMR spectra for these nuclei are free of complicating quadrupolar effects. In April 2008, a beam of ^{11}Be was produced and polarized at a readily usable intensity of about 10^{6}/s at the β-NMR spectrometer. In contrast to the muon, with its short lifetime of 2.2 μs, the β-NMR probes have much longer lifetimes, making them sensitive to timescales comparable to conventional NMR. Development of other probe beams is also currently limited by the lack of beam time.

The Science of Metamaterials with β-NMR

When materials are combined to form a layered heterostructure, the resulting properties may differ substantially from those of each of the pure bulk starting materials. Such metamaterials have important applications in electronics and sensors, and newly developed metamaterials can have unprecedented properties, which may form the basis of entirely new technologies, such as quantum computers or spintronics. In a similar way, the properties of materials differ at a free surface. For example, in surface reconstruction, the crystal structure of atoms at the surface is different from that of a simple truncation of the bulk. In fact, all structural, magnetic, and electronic properties of metamaterials and crystals near a free surface are depth-dependent. The only issue is the length scale over which the bulk properties are recovered. Remarkably little is known about such phenomena, for the simple reason that there are only a very few

depth-resolved techniques. There are a number of "surface" methods, for example, scanning tunneling microscopy and photoemission (of electrons), but these are limited to the topmost atomic layers.

In β-NMR (as in μSR), properties of the probe spin polarization are detected via the anisotropy of the weak β-decay. This "nuclear" detection scheme enables measurements using many fewer probe spins than conventional magnetic resonance experiments. Together with the low beam energy at ISAC (typically 30 keV), and electrostatic deceleration, β-NMR can be used as a sensitive depth-resolved local probe of metamaterials and near surfaces.

Previous uses of β-NMR in materials science have been focused on studies of point defects in semiconductors. In contrast, the CMMS β-NMR experiments are aimed at using the implanted probe to investigate intrinsic properties of materials, and in particular depth-dependent phenomena on the nanometre scale in thin film heterostructures. As in the case of μSR, we have recently established that β-NMR can be used effectively to study intrinsic local electronic or magnetic properties, and thus provide information similar to what a host nuclear spin would reveal. Of course, conventional NMR is not possible in a nanostructure due to the limited sensitivity of that technique.

The CMMS team has developed this technique over the past few years, and that investment is now paying off with exciting new science. For example, the use of nanoscale magnets for technological applications such as information storage or quantum computing requires monodisperse magnets that can be addressed individually. A major step towards achieving this goal came recently with the discovery of molecules that function as identical magnets, and the ability to deposit a monolayer of these molecules on a suitable substrate. At low temperatures, these single-molecule magnets (SMMs) exhibit fascinating quantum mechanical behaviour that dramatically affects macroscopic properties such as magnetization. These include the observation of quantum tunneling of the magnetization (QTM), topological quantum phase interference, and quantum coherence. However, the small quantity of magnetic material present in a monolayer (or sub-monolayer) means that it is virtually impossible to accurately determine magnetic properties with conventional bulk techniques. Researchers at CMMS used β-NMR to investigate the magnetic properties of SMMs in a two-dimensional lattice [Nano Lett. 7, 1551 (2007)], measuring the temperature dependence of the magnetic moments of a monolayer of the prototypical SMM, Mn_{12}, grafted to a silicon substrate. Intriguingly, the magnetic properties of the SMMs in this low dimensional configuration differ significantly from the bulk. With tantalizing prospects such as the above example, the wider μSR community is keen to apply this new probe to study highly topical and technologically relevant problems in the study of materials.

The SMM experiment is one example of a more general approach that the CMMS team has been developing, that of proximal detection [J. Magn. Reson. 191, 47 (2008)], *i.e.*, implanting the probe ions, not into the material of interest but into a simple inert adjacent layer. Other examples include studies using Ag / high-T_c superconductor heterostructures.

Another recent advance was the first ever beta detection of a pure nuclear quadrupolar resonance in zero applied field [Phys. Rev. B 70, 104404 (2004)]. Because the spin two ^{8}Li has a small electric quadrupole moment, its spin is coupled not only to internal magnetic fields in a material, but also to the local electric field gradient, *i.e.*, to the local structure of the surrounding atoms. This

coupling can complicate the spectrum when the Li is in a site of less than cubic symmetry, compared to a pure magnetic spin one-half probe like the muon. However, it has also proven useful in the study of the structural phase transition in $SrTiO_3$ [Phys. Rev. Lett. 96, 147601 (2006)], where it was used to monitor the distinct near-surface behaviour of this prototypical soft-mode structural transition. Since then, this work provided strong motivation for the 2007–2008 completion of the deceleration capability on the second (low-field) β-NMR station, now known as the β-NQR spectrometer, to study the depth dependence of this phenomenon. More recently, it also spawned depth-dependent grazing incidence synchrotron X-ray diffraction experiments, using this complementary "reciprocal space" probe.

Low- and zero-field capabilities have been extremely useful in μSR studies of weak magnetism, and it is anticipated that they will be similarly useful in β-NMR. For example, in the search for weak magnetism that may exist at some interfaces of high-temperature superconductors (see TRIUMF experiment M1041). Another low-field phenomenon that will prove both interesting and useful is the recent observation that at sufficiently low fields the implanted ^{8}Li is sensitive to the dynamics of the host nuclear spin system, which allows β-NMR to monitor the host nuclear spin dynamics (and hence the low energy excitations of the system) under conditions (thin layer, depth-resolved, and small nuclear moments) where conventional NMR is impossible. The first use of this has been to make absolute measurements of the magnetic penetration depth in superconductors [M.D. Hossain *et al.*, submitted to Phys. Rev. Lett (2008)].

Newly proposed experiments focus on superconducting and magnetic proximity effects in heterostructures, for example, involving magnetic semiconductors such as Mn-doped GaAs and EuO, which have been intensively studied for developing semiconductor spintronics.

In the context of so much progress in establishing the power of this new method and the discovery potential, it is frustrating that progress is severely limited by access to beam time.

μSR

Starting in 2008, the μSR facility will enter a period of unprecedented expansion with the upgrade to the surface muon beam line M9A and to the M20 beam line, which will be split to serve two experimental areas simultaneously. The former project was funded in the previous Five-Year Plan and the latter, in 2006–2007, by a large Canada Foundation for Innovation Grant.[10] The increasing availability of muons for materials research will provide the flourishing community with much needed beam time. The excess of user demand for beam time over available time is illustrated by the current backlog of more than 60 weeks or approximately two beam line years. In the coming five-year period, the beam line expansion will necessitate the development of new spectrometers and new capabilities that continue to push the forefront of the technique.

10 Details of the CFI award: "Muon Beam Line for Molecular and Materials Science at TRIUMF", P.W. Percival, Simon Fraser University, Principle Investigator, can be found at the CFI website http://www.innovation.ca/projects/index.cfm. The award was $2.4 million (CFI, approved Nov. 2006) + $2.4 million (BCKDF, approved June 2007) + $1.2 million (TRIUMF), see section 4.3.1 for more details.

With an ample supply of new beam lines providing high luminosity beams to five experimental stations, and a guaranteed supply of cryogens (see section on helium liquefaction below), the focus of facility development will shift to experimental capabilities, expanding the parameter space for experiments, for example, with applied pressure, optical illumination, applied electric fields, or the combination of high pressures and ultra-low temperatures. Emphasis will also be placed on increasing the reliability and ease of use of the spectrometers, for instance, using a new generation of reconfigurable electronics. It will also be important to promote facility capabilities and develop new users, particularly nonexpert users whose central research expertise lies in other areas.

Above all, new people are required to support these major expansions. By any reasonable measure, the CMMS is already understaffed. For example, the LMU muon facility at PSI currently has a staff of 14 scientists plus technical support. In 2008, TRIUMF hired another scientist whose time is divided between the M20 upgrade, β-NMR, and general μSR support. With the current and planned expansion, understaffing will become critical. Thus, we plan to hire three new scientists in addition to the current positions. Two of these will support the expanded demands due to the new muon beam lines and will be included in the next user-based NSERC MFA/MRS application. We request that TRIUMF support the remaining position, a scientist responsible solely for β-NMR, and who will be charged with the significant technical challenges of maintaining and expanding the β-NMR capabilities as well as managing the transition to a user-friendly system required for a user facility.

With the new beam lines currently underway, TRIUMF will continue to be the leading facility for innovative experimental science with μSR, provided there is sufficient support to fully utilize this capacity. In particular, this requires infrastructure investment in new spectrometer capabilities, and most importantly the support personnel to develop and maintain them.

Materials Science and Chemistry with μSR

The basic themes of the science of μSR are summarized in the section above and Section 4.3.1.

The development of new beam lines and spectrometers will supply the vibrant research programs of CMMS users in areas of traditional strength, *i.e.*, superconductivity, magnetism, hydrogen in semiconductors, gas phase chemical kinetics, and free radical chemistry. However, it will also foster newly emerging research focused on functional materials design, environmental chemistry in supercritical and ionic fluids, in materials for energy storage and transmission, such as hydrogen storage and battery applications. It will also provide opportunities for new users to embark on a μSR research program that is currently limited by the oversubscription of available beams. In the past three years, there have been 105 experimental proposals and reports vetted by the Molecular and Materials Science Experiments Evaluation Committee. The pool of experimenters is typically broad with 36% of spokespersons local BC users, 15% from elsewhere in Canada, 12% from the US, 31% from Japan, and 6% from Europe.

Some notable new capabilities that continue to develop, opening up more parameter space for the study of materials, are the ability to do μSR experiments under high pressure and under optical excitation. The increasing

availability of muon beams currently underway, together with new capabilities, will enable significant new scientific opportunities in many areas.

The newly emerging research from the CMMS μSR facility is well illustrated by the program of Prof. K. Ghandi of Mt. Allison University on the application of muon science to probe "green chemistry" at the microscopic and fundamental level. His research group focuses on three areas:

1. The development of laser-controlled muonium chemistry to study the effect of selective excitation on free radicals. The idea is to use photon absorption, instead of chemical reactions. Their first report of laser excitation on muonium chemical dynamics was published as a cover article [K. Ghandi, I. P. Clark, J. S. Lord, S. P. Cottrell, Phys. Chem. Chem. Phys., 9, 353-359 (2007)].

2. The study of free radical chemistry in supercritical CO_2 as a "green solvent". A supercritical fluid (SCF) is any substance above its critical temperature (T_c) and pressure (P_c) but below the pressure required to condense it into a solid. As the temperature increases, the liquid becomes less dense, due to thermal expansion, and as the pressure increases, the gas becomes denser. At the critical point, the densities become equal, and the phase distinction between liquid and gas disappears. SCFs have a host of properties not found in conventional solvents, such as gas-like diffusivities and liquid-like densities, and the ability to be "tuned," meaning that their solvent properties can change significantly as a function of temperature and pressure. Supercritical CO_2 has been used as a solvent for a wide variety of chemical applications, including free radical polymerization and photochemical reactions. Carbon dioxide is not classified as a volatile organic chemical solvent by the Environmental Protection Agency. In addition, CO_2 is inexpensive and nonflammable. It is an energy-conserving, selective, and waste-reducing alternative to organic solvents. Moreover, the use of supercritical CO_2 doesn't add to the greenhouse effect because it can easily be conserved during the industrial processes. The focus of the Mount Allison University group is to investigate, at the fundamental level, the tunability of free radical reactions in supercritical CO_2.

3. The study of free radical reactions in ionic liquids (ILs), another class of "green" solvents. ILs are two-component systems composed of equimolar amounts of anions and cations. The contrasting nature of cations and anions, specifically, close sites of high electron deficiency and high electron richness, suggests that ionic liquid solvents could enable chemistry that is not possible in normal molecular solvents. Experiments are designed to investigate significant coulomb interactions of cations and anions with free radicals and free radical precursors. It has been found that there is significant local ordering in ILs, and that this has significant effects on both the generation and structure of radicals. Information on the electronic structure of radicals as well as the effect of solvent interactions is gained by measurement of hyperfine coupling constants, while information on free radical reaction dynamics in green solvents is obtained by the measurement of spin relaxation rates.

Further examples can be found in Section 4.3.1.

Proton Driver Beams for β-NMR and μSR

Currently, both β-NMR and μSR depend on proton beams from the TRIUMF cyclotron to produce muon and radioactive ion beams. To make full use of the new muon beam lines and to continue the current β-NMR program while the new production target is designed, built, and commissioned, it is essential that the cyclotron be maintained, and in the context of increasing demands from the overall ISAC program and radioisotope production, it is essential that the cyclotron's operating current be upgraded significantly.

Aside from the intensity of the proton beam, the primary technical constraint to maximizing the luminosity (and usefulness) of both the new and existing muon beam lines is the nature of the production targets on BL1A. These targets were not designed to optimize muon flux, and the T2 target in particular has a poor geometry, with the consequences of low luminosity and short target lifetime. A substantial fraction of the proton current from the cyclotron is now delivered to ISAC, necessitating a reduction of BL1A current from the pre-ISAC 140 μA down to the current maximum 100 μA. With the increasing demands of ISAC, this trend will only continue. Thus, it is imperative to redesign and rebuild the muon production targets now and to upgrade the cyclotron for higher operating current (see Section 6.2.1.2.1) to make the most of the new μSR infrastructure in the Meson Hall.

Helium Liquefaction

Liquid helium is used as a cryogen throughout the CMMS facility for the operation of superconducting magnets and for controlling the experimental temperature. Temperature is a critical experimental variable in all μSR and β-NMR experiments, and the low temperatures are particularly important to reveal properties of the lowest energy "ground" state of the system, free from the effects of thermal fluctuations. Recent worldwide shortages of helium are currently limiting the supply available to CMMS users to about 60% of requirements, and the price is increasing rapidly.[11] This situation is expected to continue and even worsen for the near future. Helium is a non-renewable resource found in the Earth's crust (released as a by-product of natural gas extraction). It poses no environmental threat if released into the atmosphere, but once released it is not recoverable. The helium shortage will rapidly become a serious limitation on the research productivity of the facility; therefore, a TRIUMF-wide helium recycling and liquefaction system must be implemented in the next five-year period. This will involve an airtight collection system, collecting helium vapour from each experiment, that will supply a liquefier, to be operated in conjunction with existing and planned liquefiers dedicated to existing ISAC-II and planned Nb cavity superconducting RF accelerators. With an efficient He recycling system, the input of He from external sources will be limited to a sustainable amount.

11 See Karen H. Kaplan, Physics Today, June 2007, p31 online at http://ptonline.aip.org/journals/doc/PHTOAD-ft/vol_60/iss_6/31_1.shtml

Summary

The CMMS is an extremely productive component of TRIUMF's research, and with the current expansion of μSR beam lines, it will continue this output as well as expand into new areas of fundamental and applied research in materials science and chemistry. However, it will require continuing support from TRIUMF in: 1) muon beam production, 2) cryogenic liquid helium production, and 3) personnel. The new β-NMR capability has excellent potential to make high impact contributions to nanoscience, but only if the available beam time can be increased. This will be possible with the e-linac, second proton beam line, and second ISAC production target that is the centrepiece of the 2010–2015 Five-Year Plan.

6.2.5

TRIUMF Theory Group

The theory group plays an important role by contributing to the intellectual leadership of TRIUMF, by providing theoretical guidance and support to the TRIUMF experimental program, and as a theoretical resource for the broader Canadian subatomic physics community. There is currently an urgent demand for increased theoretical activity in nuclear physics, nuclear astrophysics and in particle phenomenology, especially to support the ISAC facility and for the upcoming experiments with ATLAS at the Large Hadron Collider (LHC). One of the priorities of this plan is to develop a theory program that fills this need and provides a centre for theoretical activity for the laboratory and the larger Canadian subatomic physics community.

The theory group connects TRIUMF to theoretical innovations in Canada and around the world, through active collaborations with scientists from 35 different institutions in 14 different countries in Asia, Europe and North America. Among several coordinated efforts with other national and international institutes, the theory group is a member of the Joint Institute for Nuclear Astrophysics (JINA) in the United States and an international collaborator in the SciDAC (Scientific Development through Advanced Computing) UNEDF effort to develop a Universal Nuclear Energy Density Functional.

Nuclear Physics

We have entered one of the most exciting eras in nuclear physics, in which substantial progress can be expected on many fundamental problems. This is due

to advances on many fronts, including the development of effective field theory and the renormalization group in nuclear physics, advances in *ab initio* methods for nuclear structure, the effort to develop a universal density functional from microscopic interactions, and the application of large-scale computing resources. At the same time, the ISAC facility is discovering new phenomena and will provide critical new data. Unique opportunities to make progress on solving both existing and new problems in nuclear physics will arise during the 2010 to 2015 period, and TRIUMF has to be at the forefront of this theoretical and experimental synergy.

Strong interaction physics in laboratory nuclei and in the cosmos extends over extremes in density and temperature, and reaches to unexplored nucleonic compositions. In nuclear theory, there is a coherent worldwide effort based on the same nucleon-nucleon and many-nucleon interactions with techniques suitable for each range of atomic number, from light to heavy nuclei, and for astrophysics. For the first time a unified description is possible due to effective field theory and the application of renormalization group methods in nuclear physics. The TRIUMF theory group has played a key role in these developments. Using the renormalization group, we have shown that nuclear forces evolve to universal low-momentum interactions for all nuclei. For lower energies, an effective field theory without explicit pions is extremely successful in capturing universal physics dominated by large scattering lengths, with applications ranging from halo nuclei to low-density matter and reactions under astrophysical conditions.

Three-nucleon interactions are a frontier in the physics of nuclei. They play a central role for nuclear masses, for shell structure and isospin dependences, and for extrapolations to the extremes of astrophysics. For the 2010 to 2015 period, TRIUMF is in the unique position to study three-nucleon interactions beyond light nuclei for the first time. Three-nucleon contributions are amplified in many-nucleon systems. This means that we will be able to test predictions for key nuclei at ISAC and by confronting global trends in nuclear masses and structure with experiments.

Low-momentum interactions are advantageous for nuclei and rapid convergence has been demonstrated in exact diagonalizations for *p*-shell nuclei. Coupled-cluster theory combined with this rapid convergence pushes the limits of accurate calculations to medium-mass nuclei and sets new benchmarks for ^{16}O and ^{40}Ca. Coupled-cluster theory highlights the spin-offs of nuclear theory. It was developed in nuclear physics 50 years ago and has become the method of choice in quantum chemistry for up to 100 electrons. The first coupled-cluster results with three-nucleon forces indicate that phenomenological monopole shifts in the shell model may be due to three-nucleon contributions. This exciting new development links understanding the origin of the shell model and the location of the drip lines to three-nucleon interactions. To test these findings, nuclear structure experiments with neutron-rich and neutron-deficient nuclei towards the drip lines will be essential. In addition, effective field theory and renormalization group methods provide powerful tools for estimating theoretical uncertainties. One of the goals of the TRIUMF theory group is to apply these techniques to matrix elements needed in fundamental symmetry tests like those for isospin-symmetry-breaking corrections to superallowed nuclear decay, for double beta decay, and for parity violation studies with nuclei.

Perturbative approaches to nuclear matter are possible with low-momentum interactions and will provide key guidance for constructing a universal density

functional for all nuclei based on microscopic interactions. First proof-of-principle calculations using density-matrix expansions and low-momentum interactions for pairing are extremely encouraging. The TRIUMF theory group and collaborators will use effective field theory and renormalization group interactions to identify new terms in the density functional, to quantify the theoretical errors in the extrapolation and to benchmark against *ab initio* methods. At ISAC, we will be able to provide key constraints and uniquely test the discovery of new trends, for example, possible isovector dependences in pairing due to contributions beyond BCS theory.

In nuclear astrophysics, the theory group has made significant contributions to superfluidity in neutron stars and to the equation of state of nuclear matter. The nuclear equation of state is key input to neutron star structure and for the physics of core-collapse. Our group's advances are based on the new developments in nuclear interactions and in many-body methods for dense matter, and on new systematic approaches for low densities near the supernova neutrinosphere. Our results for neutron superfluidity are used in all modern neutron star cooling simulations and provide constraints for the neutron star crust in low-mass X-ray binaries. In addition to advancing our understanding of the nature and evolution of neutron stars, TRIUMF theorists have begun work on the conditions for nucleosynthesis in neutrino-driven supernova outflow. With our plans for the future, the group will intensify the activity on nucleosynthesis and on nuclear reactions for astrophysics in the 2010 to 2015 period.

Particle Physics

The next few years will be a unique time in elementary particle physics. The LHC at CERN will be turning on this year. It will be the highest energy particle accelerator ever built and will almost certainly revolutionize our understanding of particle physics. It will, in effect, "rewrite the textbooks."

Our current understanding of elementary particles and their interactions is called the standard model. Completed in the early 1970s, it was based on experimental results from the previous decades. The ensuing 30 years have been a period of consolidation and refinement. Despite the successes of the standard model, it contains theoretical inconsistencies in the sector of the theory responsible for giving particles mass, technically known as electroweak symmetry breaking (EWSB). The purpose of the LHC is to understand the mechanism of EWSB and to search for physics beyond the standard model.

Canada has invested roughly C$100 million in this project. In addition, about 120 experimental physicists in Canada work on the LHC research program. Despite these major commitments, there is very limited theoretical support for the LHC program in Canada and yet much theoretical work remains to be done to understand the signatures of new physics, as they are unveiled at the LHC. If a Higgs boson or a Higgs-boson-like particle is discovered, much theoretical work will be required to determine if it is indeed the standard model Higgs boson or it simply corresponds to one of the extensions of the standard model. Independent of the Higgs boson, there will probably be other indications of physics beyond the standard model. With many possible extensions of the standard model, close interaction between theorists and experimentalists will be required to determine the implications of any results. TRIUMF is the natural place to develop this interaction because TRIUMF is

currently building a sizable experimental group in conjunction with the ATLAS Tier-1 Data Centre to help analyze the ATLAS data.

In addition to the LHC, new results are expected on the properties of neutrinos from the T2K experiment, which has strong TRIUMF involvement, as well as from SNOLAB experiments, which could be crucial in determining if any new physics found at the LHC corresponds to dark matter.

A highlight of the group's theoretical work is the study of how neutrino properties tie into the new physics that may be discovered at the LHC. It is now generally accepted that the three active light neutrinos of the standard model have small masses. However, the origin of the masses is still not understood. The conventional view is that they result from the seesaw mechanism, which invokes the existence of two or more very massive, beyond 10^{12} GeV, right-handed standard-model singlet neutrinos. While the mechanism can be elegantly tied to grand unified theories, it remains very difficult to test directly. Recently, the group has taken the unconventional approach that the light neutrinos get masses from quantum effects without invoking the existence of very massive standard-model singlets. Without extending the gauge group of the standard model, we have extended the Higgs sector to include both a triplet and a singlet complex scalar field. This mechanism is also known as type-II seesaw. In addition, the group added to the usual construction by hypothesizing that the lepton number violating interactions reside only in the scalar potential while the Yukawa and gauge interactions all conserve lepton number. As a result, the active neutrinos acquire masses at the two-loop level and thus are naturally small.

We predict a normal hierarchy for neutrino masses. The additional scalars are all found to be in the TeV range in order for the theory to be predictive, which makes the model directly testable at the LHC. The most interesting signal will be due to doubly charged scalars that decay into the same sign lepton pairs of different flavors, such as $P^{++}{}_{1,2} \rightarrow \tau^+e^+$. In this model, the dominant amplitude that gives rise to nuclear neutrinoless double-beta decay will be due to virtual doubly charged scalar exchanges and not neutrino exchange. This result is due to the fact that neutrinoless double-beta decays measure the first element of the neutrino mass matrix, which in this model is not two-loop suppressed but also suppressed by the mass of the electron. Furthermore, this amplitude is also directly related to their production at the LHC and hence links high-energy and low-energy processes.

Plans for the Future

The TRIUMF theory group currently has four permanent members. Two new members are expected to join by 2010. In the 2010–2015 period, the group will be expanded and refocused to exploit synergies with the experimental program and the major new initiative. This enhancement will permit theoretical support for both the nuclear and particle physics areas with three to four people in each area.

The Theory Group Research Associate Program has served TRIUMF very well and was identified in the 2002 NRC External Review as a major success. NRC-funded research associates are hired as a resource for the whole laboratory. They have brought new expertise to TRIUMF to support areas of interest not currently covered by the permanent members. After their work at TRIUMF, many of our research associates have gone on to successful aca-

demic and industrial careers. There are currently five NRC-funded research associates and this program will continue in the upcoming five-year period.

The theory group provides an integral component of training future leaders in science and technology for Canada. The group offers an excellent training and research experience for undergraduate and graduate students, and a unique research environment for post-doctoral researchers. In the past two years, the theory group undergraduate positions have been the most popular within the TRIUMF summer undergraduate program.

As identified in the 2002 NRC External Review and the 2006 NSERC SAP Long-Range Plan, a vibrant Visitor and Workshop Program is an important service to the Canadian subatomic theory community. The group's Visitor Program supports scientists and students, some of whom come for a few days and others for one-year sabbaticals. These visitors not only add to the intellectual atmosphere at TRIUMF, they increase the profile of TRIUMF in the community. theory group visitors are provided with financial support and, for long-term visits, partial salaries, and living expenses.

Theory group workshops range from topical one-week workshops with 30 to 40 participants to smaller working group meetings of several weeks with 5 to 10 participants. Between 2010 and 2015, the group will expand its workshop program, to bring the expertise of the national and international subatomic theory community to TRIUMF, and to raise TRIUMF's profile. In addition, the workshops and meetings could be organized by university colleagues who would not have the infrastructure to host such meetings at their home institutions.

6.2.6

Detector Facilities

Introduction

TRIUMF contributes to the design, development, and construction of advanced detectors for diverse applications. The roots of this activity lie in the development of detectors for particle and nuclear physics, but the activities have expanded over time to support advanced detector development for molecular and materials sciences and nuclear medicine. TRIUMF has a long history of collaborating with researchers at Canadian universities in the design and construction of various state-of-the-art detector systems as Canadian contributions to experiments both at TRIUMF and at foreign laboratories. In addition to the TRIUMF detector group, the laboratory has expert designers, engineers, and technicians who are fully engaged in this enterprise.

TRIUMF's detector group now consists of the detector facility for construction and the recently subsumed Laboratory for Detector Development (LADD), which was created with Canada Foundation for Innovation (CFI) funding and which brought expertise and tools for the design and construction of the electronic signal processing systems that are vital for the acquisition of large volumes of data from modern detectors. The vision for the 2010–2015 period will place heavy demands on TRIUMF's detector infrastructure and, in doing so, will not only exploit new capabilities but also require further growth in specific areas. Prominent among these is the acquisition of expertise and design tools for application specific integrated circuits (ASICs), which are

indispensable components of the complex high-density signal processing systems of modern detector systems.

Future Projects

Some of the anticipated projects during 2010–2015 that will utilize TRIUMF detector facilities include:

ATLAS Detector Upgrades

By 2015, parts of the present ATLAS detector will need to be replaced because of radiation damage as well as the anticipated ten-fold increase in particle fluxes from the planned upgrade of the Large Hadron Collider accelerator complex. Two ATLAS upgrade projects have been approved by NSERC for R&D: very high-rate, forward calorimeters and diamond-based pixel trackers. Both projects require contributions from TRIUMF infrastructure, including mechanical engineering, design, and technical support. If ATLAS electronics upgrade projects proceed in Canada, the detector group's new ASIC capability will be needed to develop a chip for the upgraded silicon tracker and also for the investigation of new radiation-hard electronic technology to be placed inside the liquid-argon cryostat of the hadronic end-cap calorimeter.

CMMS detectors

Over the years, researchers in molecular and materials sciences that utilize secondary beams at TRIUMF have been steady clients of the TRIUMF detector facility. Because the time from conception to measurement is typically much shorter in materials science than in particle and nuclear physics, these researchers count on prompt responses from the highly experienced experts in the scintillator shop to requests to construct new configurations of plastic scintillators, often of complex shapes. This reliance on the facility can be expected to continue indefinitely.

ILC Detector Development

TRIUMF scientists have been strongly involved in the development of a next-generation time projection chamber (TPC) that is a prime candidate for the large central tracker of the International Linear Collider (ILC) detector. The expertise of the detector group with multi-pixel photon counters can be expected to be applicable to the readout of a fine-grained hadron calorimeter that is being studied for ILC. In addition, TRIUMF's expertise in the use of micro-pattern gas detectors as the sensors of the ILC TPC led to their timely application in the TPCs now being constructed for the T2K experiment in Japan.

Medical Imaging

One of the new initiatives that attracted the CFI funding establishing LADD is the development of a liquid-xenon TPC for positron emission tomography (PET). In collaboration with the University of British Columbia, the TRIUMF detector group has designed and constructed a prototype for one segment of an eventual 12-segment microPET ring detector suitable for small animals. The

group plans to construct the whole-ring detector, using external funding now being pursued.

In another collaboration, the group plans to work with R. Lecomte's group at l'Université de Sherbrooke to extend PET research to the investigation of other possible detector technologies, both conventional and advanced. A new material called cadmium zinc telluride (CZT) is a high-density semi-conductor with unsurpassed energy resolution at room temperature and the potential for much improved spatial resolution. The detector group intends to work in collaboration with Redlen Industries in Sydney, BC, which has developed methods to produce large crystal detectors. The group is also interested in investigating designs for internal PET probes using CZT by performing simulations and test measurements.

Thirdly, the group plans to study a method of enhancing the background suppression abilities of conventional PET detectors by improving the time resolution of the light detectors viewing the scintillators.

In addition to the activities at TRIUMF for detector research, development, and construction, a request to CFI for new infrastructure similar to LADD is being considered. This infrastructure would enhance the group's capabilities, particularly in the area of ASIC design and development.

Nuclear Physics

Ongoing work on various detectors for TRIUMF's ISAC program has led to a new collaboration with the GSI German national laboratory in Darmstadt. GSI is embarking on a major program of building new accelerators and facilities, many of them for nuclear physics or astrophysics. Several members of GSI management attended a recent workshop at TRIUMF and identified several areas of detector R&D where collaboration could be fruitful.

The first area of collaboration would be work on double-sided silicon-strip detectors. TRIUMF has little experience here and could benefit from work on the planned application of this technology to DESPEC at GSI. The second area of collaboration would be small TPCs containing the target gas with both cylindrical and Cartesian geometries. Here, TRIUMF's experience and expertise with cylindrical geometries in TACTIC (TRIUMF Annular Chamber for Tracking and Identification of Charged Particles) and with micro-pattern gas detectors are particularly relevant. A third area would be scintillator readout with multi-pixel photon counters, which could be applicable to the DESPEC neutron detector array at GSI. Finally, the two laboratories could collaborate on the possible application of a liquid xenon TPC to the EXL facility planned at GSI. These latter two areas are particularly synergistic with the medical imaging program described below.

SNOLAB Detectors

The detector group has proposed a signal-processing solution to the Dark Matter Experiment with Argon Pulse-shape discrimination (DEAP) collaboration, which is designing an experiment using a one-tonne liquid-argon scintillator detector to search for dark matter at the Sudbury Neutrino Observatory Laboratory (SNOLAB). As a member of the DEAP collaboration, TRIUMF would construct and implement this electronic system between 2010 and 2015.

The expertise of the detector group in mechanical design, signal processing, gas control and purification systems is expected to play an important role in

EXO (Enriched Xenon Observatory), another challenging SNOLAB experiment that needs significant R&D. The EXO detector is a high-pressure xenon time projection chamber dedicated to detecting neutrinoless double-beta decay. The construction of a large-scale prototype will begin around 2010.

SuperB

Canadian institutes are members of a new collaboration that plans to build a detector system at a future very high luminosity B-Factory in Italy. If this facility is funded soon, construction of this detector can be expected to require the participation of TRIUMF in the period 2010 to 2015.

Conclusion

TRIUMF detector facilities have been key to the success of many Canadian-led projects in particle physics, nuclear physics, molecular and materials science, and medical imaging, including experiments based both at TRIUMF and off-site. Both TRIUMF scientists and university faculty have led these projects, but the central infrastructure provided by TRIUMF enables this Canadian leadership. As technology advances between 2010 and 2015, so will the demands on the TRIUMF detector facilities. TRIUMF is prepared to meet these challenges and continue the progress of Canadian research.

6.3

Accelerator Technology Development and Stewardship

The Role of TRIUMF Accelerators

TRIUMF accelerators are the heart of the Canadian accelerator-based experimental subatomic physics program, both because they enable on-site world-class research in nuclear physics and because TRIUMF's expertise allows Canada to make significant in-kind contributions to off-site international accelerator projects thus enabling participation in experiments at those facilities. In addition, the TRIUMF accelerator complex is the basis for high-impact Canadian research in materials science and PET-based nuclear medicine programs. Finally, we envision expansion of programs designed to utilize the accelerator infrastructure and expertise as a training ground for the next generation of accelerator scientists and engineers. A major aim of this expansion is to establish a strong graduate student program in accelerator physics in collaboration with member universities, from the University of British Columbia to the University of Toronto.

PEOPLE

ROBERT LAXDAL

TRIUMF Research Scientist

Robert Laxdal received his B.Sc. (Honours) and M.Sc. degrees in physics from the University of Saskatchewan in 1977 and 1980, respectively. His M.Sc. thesis, "Design of an Energy Compression System for the Saskatchewan Accelerator Laboratory," provided the design for a magnet chicane and RF cavity to reduce the energy spread in the electron beam from the SAL electron linear accelerator.

Mr. Laxdal joined the TRIUMF cyclotron group in 1980, contributing to, and eventually leading, the team developing the TRIUMF 500MeV cyclotron to be used as an injector to the proposed KAON Factory. In 1995, he joined the ISAC project and led a number of design and commissioning teams responsible for the installation of the ISAC-I accelerators and beam lines. In 2000, he began developing superconducting RF technical expertise at TRIUMF with the goal to build and install a heavy ion superconducting linac (SC-linac) as part of the ISAC-II project. The initial phase of the project was completed in 2006, with the commissioning of the medium-beta section of the ISAC-II linac with accelerating gradients significantly higher than those available at competing facilities.

Bob is now collaborating with a local company, PAVAC Industries Inc., in the fabrication of superconducting cavities, a first for Canadian industry. The cavities will be used in the next phase of the SC-linac installation to be completed by the end of 2009. He is currently head of the ISAC-II project, the Beam Delivery Group and the SCRF Group. ■

The TRIUMF cyclotron offers the highest power on-line separated isotope beam (ISOL) driver in the world giving the ISAC facility the world lead in the production of many exotic ion beams particularly on the neutron-deficient side. These beams offer a major advance in probing nuclear physics processes and uniquely place TRIUMF as a leader in experiments at the "precision frontier" to address some of the fundamental scientific questions of our time.

While TRIUMF does not support on-site subatomic physics research at the "energy frontier," its accelerator scientists contribute significantly to projects around the world, and thus provide a mechanism by which Canadian scientists participate in international experiments such as ATLAS at CERN, T2K at J-PARC, and possibly the International Linear Collider (ILC) and CERN Large Hadron Collider (LHC) upgrades.

TRIUMF accelerators also enable a research program in materials, bulk and surface effects in extreme conditions, as well as a world-renowned nuclear medicine program that utilizes medical isotopes combined with positron emission tomography detectors.

TRIUMF has a clear vision of how to enhance the base for Canadian accelerator science and technology human capital. We plan to strengthen our ties to the university community, primarily within BC, but extending as far as Ontario, and to set up an accelerator physics program with TRIUMF staff teaching courses and mentoring students towards advanced degrees. These education and mentorship opportunities will build up on the already successful Co-operative Education Program that involves tens of undergraduate students a year, who gain practical knowledge in the field of accelerator engineering at TRIUMF.

Future Scientific Goals

TRIUMF's scientific program for the next decade will focus on two main areas of study. The first is the study of neutron-rich nuclei, which will complement the current neutron-deficient program. This program will address fundamental questions in nuclear physics and nuclear astrophysics such as element abundances, supernova explosions, neutron density models, neutron star crusts, and three-nucleon interactions. The second area of study is fundamental symmetries, which will provide stringent probes into physics beyond the standard model. In addition, new initiatives in the materials sciences and nuclear medicine will include increasing the β-NMR running time, developing new radiotracers with actinides, and the expansion of cancer imaging and therapy.

Support of these challenging but promising goals requires higher proton-beam intensity, more rare-isotope beam (RIB) time, and new reach for both the neutrin-rich and neutron-deficient exotic ions.

Accelerator Projects in Support of Future Scientific Goals

To realize these scientific goals and continue to advance our knowledge, from the smallest to the largest scale, we are planning the following five accelerator projects, which are a combination of upgrades of existing infrastructure and new initiatives. These projects together represent an efficient plan to address all

the accelerator infrastructure initiatives and extend beyond the next five-year funding cycle to sets goals and milestones for the decade from 2008 to 2018.

1. The 500 MeV H^- cyclotron will retain its key role in supporting a multifaceted science program based on primary proton beams. Deployment of the intensity upgrade will enhance the extracted beam current from 250 A to 300 A by 2015 and above 400 A in the future while preserving the present reliability level with machine uptime of above 90%. A significant component of this program is refurbishing or replacing old equipment, some of which has been in operation for 35 years and must be considered close to its lifespan. New beam extraction techniques and algorithms for beam intensity stabilization will be developed.

2. A major driver of the need for increased cyclotron beam current is a new primary proton beam line that will deliver protons to a new actinide target station (one more station will be added around 2017) in the ISAC complex. This line will have an advanced beam transport design in comparison to the existing ISAC beam line and will include a beam dump compatible with 200 A operation to facilitate cyclotron tuning and development.

3. To maintain its world leadership in ISOL techniques, TRIUMF continually invests in the development of new exotic beams by studying new target materials, inventing new target configurations, and employing new on-line ion sources. A new target station, in combination with high-intensity proton and electron driving beams, will enhance the RIB development capabilities. ISAC beam time will be efficiently shared between experiments and developments to the maximum benefit of the RIB users.

4. The ISAC complex of heavy-ion linear accelerators has demonstrated excellent reliability combined with the flexibility to accelerate different ion species over a wide range of energies. Expansion of the ISAC accelerator facilities will increase the mass reach of accelerated ions into the *terra incognita*, opening new frontiers for nuclear physics experiments. A major goal of the ISAC facility upgrade in the longer term is to provide, simultaneously, multiple exotic beams delivered to the three distinct experimental areas, where eight state-of-the-art unique apparatuses are available to produce unique science.

5. The electron linear accelerator (e-linac) and its photo-fission based actinide target station represent the major laboratory infrastructure initiative for the Five-Year Plan. It will provide an additional source of neutron-rich isotopes for nuclear physics, and of ^{8}Li for β-NMR studies in molecular and materials science. The accelerator will be based on the 1.3 GHz superconducting radio-freuqency (SRF) technology that incorporates the latest advancements in this field from the frontier ILC design. A major distinction of the e-linac is its continuous wave (cw) mode of operation. Our R&D efforts towards improvements of high-power machine components, such as RF input couplers, will benefit all future MW regime facilities such as injec-

tors for fourth-generation light sources or accelerator-driven subcritical (nuclear) reactors for power generation.

Establishing SRF as a Core Competency and Partnering with Industry

In addition to the projects outlined above, it is the vision of TRIUMF to elevate its already prominent superconducting RF (SRF) expertise into a true core competency in the service of future TRIUMF projects, Canadian and international accelerator initiatives, and promoting and directly contributing to the Canadian entrepreneurial advantage. The majority of the new and proposed accelerators worldwide are based on SRF technology. The tremendous progress made in the last decades has proven this technology to be reliable, cost-effective, and capable of delivering beams of the highest quality and precision.

TRIUMF's SRF team has already gained international recognition by developing and putting into operation a record-breaking, high-gradient, low beam velocity ($\beta = v/c \ll 1$), heavy ion superconducting linac. This team is now viewed as a capable partner for high frequency (1.3 GHz), $\beta \approx 1$ SC accelerator development. This status has recently allowed TRIUMF to establish collaborations with key players in the field, such as DESY and Fermilab, and to become a member of the Tesla Technology Collaboration. Further, based on TRIUMF's valued status in the field, the Indian Variable Energy Cyclotron Centre (VECC) is prepared to partner and directly contribute to our SRF development program.

Developing SRF into one of TRIUMF's core competencies has much broader implications. The need for Canada to stay at the forefront of subatomic research and to transfer technology knowledge to industry is best exemplified in the following excerpt from the Report of the NSERC 2006 Long-Range Planning Committee: "Canada's economy is undergoing significant change as it transitions from being resource-based to being knowledge-based. It is critical for Canada to have a strong and vibrant scientific community, to provide expertise and highly qualified people to Canadian industry. …. In particular, Canada must remain at the forefront of subatomic physics research" ["Perspectives on Subatomic Physics in Canada 2006–2016," Report of the NSERC Long-Range Planning Committee]. While building the ISAC-II superconducting (SC) linac, TRIUMF promoted and assisted a local BC-based engineering company, PAVAC Industries Inc. in developing technology for fabrication of bulk niobium superconducting cavities. This technology transfer directly responds to the NSERC Long-Range Planning Committee's vision and has great potential for the future international accelerator facilities. It will transform Canada from a purchaser of SRF technology to a nation with the capability to produce, process and sell niobium cavities and their attendant components. Presently, there are only a few vendors of SRF technology worldwide, and through our collaboration with PAVAC, Canadian industry will be able to join this elite group.

The TRIUMF SRF R&D program will expand beyond the needs of the e-linac to aim at the quest for higher accelerating gradients and higher operational quality factors via the use of single-crystal or few-crystal SC cavities. With these activities, we plan to contribute to the ILC design and to the development of the LHC and its upgraded injector, the superconducting proton

linac (SPL). The Canadian university community has a very strong interest in both these high-energy physics frontier experimental facilities.

Superconducting electron linacs are proposed around the world as drivers for fourth-generation light sources; future reconfiguration of the e-linac as an ERL opens the door to such a possibility. A shortcut to high-energy X-rays is proposed via inverse Compton scattering (ICS) of optical photons off of electrons of hundreds of MeV. ICS has applications in molecular and materials science and medical imaging. E-linac could serve as a test-bed for the enabling technologies for an ICS source at the Canadian Light Source in Saskatoon.

Adding new SRF expertise in 1.3 GHz cavities design to the existing capabilities developed with ISAC-II SC linac construction, TRIUMF will become a unique centre for SRF science and accelerator physics.

TRIUMF's International Competitiveness

The TRIUMF Accelerator Division is uniquely positioned to support these future scientific opportunities. The accelerator division staff possesses all the required knowledge and expertise to both upgrade the facilities and operate them efficiently and, by doing so, satisfy this domain's science needs.

TRIUMF, despite its modest size (equivalent to a division at other accelerator laboratories such as CERN, Fermilab and KEK), holds a mix of accelerator expertise that could be matched in range at other laboratories only by pooling divisions. These areas of expertise, unique in Canada and rare in the world when viewed as a combined set, include:

- Physics of accelerated beams (cyclotrons, synchrotrons and linacs)
- Superconducting RF (SRF) cavities
- Low-level RF (LLRF)
- High power RF (HPRF)
- H^- high-intensity ion sources
- Heavy-ion particle sources
- High power targets and radiochemistry
- Nuclear engineering and remote handling techniques
- Beam diagnostics
- Cryogenics and vacuum
- Magnets design
- High power pulsed power supplies
- Experimental physics control systems

This expertise must be preserved and augmented in order to secure Canada's subatomic physics future as well as to produce a new spin-off for Canadian nuclear medicine.

TRIUMF's accelerator scientists and engineers are highly regarded and sought after worldwide as scientific collaborators, project reviewers, members of high-level committees, and international conference organizers. Just to name a few examples: three of the laboratory's staff are presently serving as members of US National Academy of Sciences committees; several serve on international review boards, for example in Israel, Germany, Japan, Switzerland, the UK, and the US; and two taught in the US Particle Accelerator School. Two major international accelerator conferences: LINAC-08 and PAC-09 with about 400 and 1,500 participants, respectively, will be hosted by TRIUMF.

In the early 1990s, while designing the KAON accelerator facility, TRIUMF developed a highly reputable expertise in synchrotron beam dynamics, which was not lost with termination of the KAON project. Moreover, it appeared to be in high demand in other accelerator laboratories and has been efficiently applied at CERN as a Canadian contribution to the LHC project. This expertise, together with other core competencies such as RF cavity and kicker magnet design, is being requested again by CERN. Our contribution to the future LHC accelerators upgrades will secure a strong Canadian position in the LHC experimental program.

Education and Training

The TRIUMF accelerator development and exploitation program will provide many opportunities to train highly qualified personnel and university students in the fields of cryogenic, vacuum and radio-frequency engineering; accelerator science (including particle beam dynamics); ion source physics and electromagnetic field modeling; radiochemistry, high power target and nuclear engineering; high power electronics; and many others.

Summary

TRIUMF's accelerator facilities will be used to address the fundamental scientific questions of our time. They will be used to explore ultimate structure and properties of matter from the smallest to the largest scales, will expand the materials and life sciences programs, will enable partnerships with industry to contribute to knowledge-based economic transformation of Canada, and will educate the next generation of accelerator scientists and engineers.

6.4

University-led Initiatives Based at TRIUMF

6.4.1

Introduction

As a joint venture of seven Canadian universities, TRIUMF provides centralized resources to a broad group of researchers and students. In this context, TRIUMF is predominantly a user facility. For example, ISAC has a large user community that works with a smaller complement of TRIUMF scientists and engineers to exploit the accelerators, beams, and detectors at TRIUMF. This model is even better defined in the Centre for Molecular and Materials Science where outside users bring their expertise and research questions and frequently equipment or major detector facilities. For the physical sciences, the funding for this equipment comes predominately from the Natural Sciences and Engineering Research Council of Canada (NSERC) or the Canada Foundation for Innovation (CFI) programs. Indeed, almost all the "end-user" experimental facilities, as opposed to the accelerators and beam lines, are funded through NSERC or CFI; only relatively small contributions have come through TRIUMF's NRC funding. TRIUMF's success relies as much upon this cooperation among the funding agencies as it does on the partnership of its member universities.

TRIUMF's major ISAC-I facilities, like DRAGON and TIGRESS, are led by university-based research collaborations. Each collaboration has developed its own governance and has successfully sought support from the Canadian research councils to design and build their experiments in consultation with TRIUMF. The resulting detector facility is then made available to the large TRIUMF user community. An analogy would be large astronomy teams that construct a telescope, which is then put into service for the larger scientific community.

At TRIUMF, the NSERC-funded experimental facilities, whose accounting is overseen by TRIUMF, represent a large financial investment that exceeded $100 million over the past few decades. To date, the CFI investments in some

detector facilities, like DESCANT, have been smaller but are still significant. In these cases, the subsequent NSERC and CFI investments are highly leveraged.

This multi-agency funding model is still evolving. Traditionally, the NRC Contribution Agreement has funded the basic accelerator and beams infrastructure and the province has supported buildings with NSERC supporting individual teams of researchers developing custom experimental apparatus. The scale of awards from the CFI has made it possible, however, for the Canadian community to create large new facilities (such as the Canadian Light Source) as well as central additions to the TRIUMF facilities. While TRIUMF cannot apply directly for CFI funds, university scientists can and do use CFI funds to enhance the lab's facilities.

CFI investments at TRIUMF through the university research community fall into two categories. The first category supports enhancements to the TRIUMF facility itself that provide new research capabilities for the nation. This includes the upgrade to the M20 beam line and the ATLAS Tier-1 Data Centre. At the end of the CFI funding period, TRIUMF will operate these facilities as part of its core program through the NRC Contribution Agreement. The second category supports the development of detector facilities, in a manner similar to NSERC capital support. The prime example here is the DESCANT detector.

In the 2010–2015 Five-Year Plan for TRIUMF, the Canadian research community is putting forward CFI proposals in both categories. In the first category, two top priority proposals are central to TRIUMF and will provide unique new capabilities to Canada:

- The e-linac, a novel new accelerator that will open significant windows to ISAC physics, provide strong ties to the international accelerator community and direct ties to leading particle physics projects, involve strong collaboration with the Canadian university community and unique ties to developing Canadian industry;
- The nuclear-medicine network, which will link radioisotope production centres across Canada and provide direct benefits to Canadian health and society.

These proposals are highly leveraged by the present TRIUMF infrastructure and have been discussed in detail (see Sections 6-2-1-2-2 and 6-2-3 respectively).

In the second category, the three principal proposals are:

- Ultra-Cold Neutron Source (UCN);
- Gamma-Ray Infrastructure for Fundamental Investigations of Nuclei (GRIFFIN); and
- ISAC Charged Particle Spectroscopy Station (IRIS).

The UCN would be used for a variety of scientific experiments: quantum levels of neutrons in gravitational field, neutron lifetime measurements, and neutron electric dipole moment measurements. This is a large project with significant contributions from international partners and is headed by a group from the University of Winnipeg and the University of Manitoba.

GRIFFIN is a new, state-of-the-art, high-efficiency γ-ray spectrometer that will, during the 2010–2015 TRIUMF Five-Year Plan period, replace the current 8π spectrometer as the primary decay spectroscopy facility at ISAC-I. This project is being proposed by a group from the University of Guelph.

IRIS is designed to study charged particle spectroscopy at ISAC-II. It could be used as a stand-alone facility or in conjunction with the existing EMMA facility and is led by a group from Saint Mary's University.

These three CFI proposals, UCN, GRIFFIN, and IRIS, are discussed in this section. They are expected to be the principal projects being proposed to CFI by Canadian researchers inspired by TRIUMF capabilities over the 2010–2015 period.

6.4.2

Canadian Spallation Ultracold Neutron Source: UCN

Introduction

The construction of the world's highest density source of ultracold neutrons (UCN) at TRIUMF has been proposed to enable precision measurements of the fundamental interactions of the neutron to be conducted with significantly improved statistical and systematic uncertainties. This source would therefore make a major impact on studies of fundamental physics with UCN that would complement and enhance the ISAC program. The technical requirements of a UCN source can be worked out so that the program would run concurrently with ISAC and μSR. A window of opportunity exists to capitalize on the successes of Y. Masuda's group at KEK and at the Research Center for Nuclear Physics (RCNP) at Osaka University. Timeliness would be served by testing the UCN source components in Japan, and then installing at TRIUMF in 2013.

Operation of a UCN source in 2013 with a density exceeding 1×10^4 UCN/cm^3 would place TRIUMF at the forefront of UCN technology. We anticipate that the highest priority initiatives for a UCN source beginning in

2013 will be a neutron lifetime experiment and/or a test of micron-scale gravity using UCN. In the longer term, a search for a non-zero neutron electric dipole moment would be pursued with very high priority.

Significant support for the UCN source would be requested from the Canada Foundation for Innovation (CFI), with matching funds from Japanese sources, and from TRIUMF. Funding for specific physics experiments would be requested from a combination of the Natural Sciences and Engineering Research Council of Canada (NSERC), Japan, and other international sources.

Physics with Ultracold Neutrons

UCN are neutrons of such remarkably low energies that they are totally reflected from the surfaces of a variety of materials. Hence, they can be confined in material bottles for long periods. Typically, UCN have kinetic energies less than 300 neV. Correspondingly, they are strongly affected by various fields, such as the Earth's gravitational field, and by strong magnetic fields.

UCN sources are often characterized and compared by the limiting UCN density achieved (ρ_{UCN}). The UCN source proposed for TRIUMF would have $\rho_{UCN} = 5 \times 10^4$ UCN/cm^3, which is at least a factor of 100 greater than any UCN source ever operated. Currently, there is only one operating UCN source in the world, at Institut Laue-Langevin (ILL) in Grenoble, France. The source at ILL typically achieves 40 UCN/cm^3 at the exit of the source. Typically, 1 to 2 UCN/cm^3 is achieved in experiments, such as in the completed ILL n-EDM experiment.

With the advent of superthermal sources of UCN, a new generation of UCN sources is under development at various laboratories (see Table 1). It is important to note that all the sources in the table are future sources that have listed projected densities, except for the LANL UCN source. TRIUMF would eventually surpass the future highest density source, which is under development at the Munich FRM-II reactor. In addition, the pulsed nature of the proposed TRIUMF source would offer considerable advantages for reduction of background compared to a reactor source.

Location	Technology	Critical Energy E_C (neV)	Storage Time τ_s(s)	Density in Experiment ρ_{UCN} (UCN/cm^3)
TRIUMF	spallation He-II	210	150	$1 - 5 \times 10^4$
ILL Grenoble	CN beam He-II	250	150	1000
SNS ORNL	CN beam He-II	134	500	150
Munich	reactor SD_2	250		10^4
NCSU	reactor SD_2	335		1000
PSI	spallation SD_2	250	6	1000
LANL	spallation SD_2	250	1.6	145

Table 1: Future UCN sources worldwide. The Los Alamos National Lab (LANL) source is the only source listed that is currently in operation (on a testing basis). All other sources are proposed (future) sources, including a future He-II source at the ILL reactor for the CryoEDM project. These are the Spallation Neutron Source (SNS) at Oak Ridge National Lab (ORNL) for the n-EDM project there, the Munich FRM-II reactor (Forschungsneutronenquelle Heinz Maier-Leibnitz), the North Carolina State University nuclear reactor (NCSU), and the Paul Scherrer Institut (PSI) source in Switzerland. The TRIUMF source figures are quoted for 20 kW peak power delivered to the spallation source. The range indicated for the TRIUMF source results from use of differing cold moderator materials, as discussed in the text.

For the TRIUMF UCN source, the lower value of 1×10^4 UCN/cm^3 in Table 1 corresponds to the version of the source that we will pursue for first operation. By modifying the source to use a liquid deuterium cold moderator, a factor of 5 in UCN density can be achieved, or 5×10^4 UCN/cm^3. The heavy water ice moderator is preferred initially for its similarity to the existing Japanese UCN source (and hence the available expertise), for its simplicity in terms of implementation and safety, and for the implied savings in cost.

Given this breakthrough in UCN production, a variety of new UCN experiments can be envisioned that are only now possible with the new generation of sources. We have discussed a variety of physics experiments that could be done with such a source and have decided to focus on the following possible experiments:

- A precise measurement of the neutron lifetime;
- Characterization of the UCN quantum states in the Earth's gravitational field; and

- A search for a non-zero neutron electric dipole moment.

Each experiment has its own physics interest and time line, so that, in time, one could envision performing a series of UCN experiments at TRIUMF. We now briefly describe the physics motivation and timeline for each experiment.

Neutron Lifetime

Subsecond measurements of the neutron lifetime are of physics interest for two reasons: 1) the neutron lifetime is currently the dominant uncertainty for accurate predictions of Big Bang nucleosynthesis, and 2) the neutron lifetime can be used to extract the Cabbibo-Kobayashi-Maskawa (CKM) matrix element V_{ud} and hence to form unitarity tests of the CKM matrix. An experiment at TRIUMF would build on preliminary work done at LANL by Bowman *et al.* and would aim for a determination of the neutron lifetime at the 0.1 s level, a factor of 8 better than the most precise determination to date.

UCN Quantum States in Gravity

This experiment aims at the precise spectroscopy of neutrons confined in energy levels above a UCN mirror in the Earth's gravitational field. The experiment is an interesting application of quantum mechanics to micron-sized quantum states. The experimental result can be used to place limits on modifications to the short-range (10 μm) behaviour of gravity, for example, theories involving micron-scale extra dimensions. The result can also be used to constrain axion models. The experiment would be led by a Japanese group (S. Komamiya *et al.*) where detector development is proceeding.

Neutron Electric Dipole Moment (nEDM)

The nEDM is a T-violating observable, and a non-zero nEDM at the current level of precision would imply CP violation beyond the standard model. A next generation search for an EDM at TRIUMF would aim for a determination at the 10^{-28} e-cm level, which is two orders of magnitude beyond the current best limit and would tightly constrain new CP-violating phases in a number of theoretical models. An nEDM project is a longer-term goal for the UCN source at TRIUMF and would build on the mature efforts underway at ILL Grenoble, PSI, and SNS.

Timeline to First Experiments

The UCN source would be developed and optimized at RCNP Osaka until 2012. The source would then be installed in the M11/M13 area. Commissioning of the source and achievement of the world record UCN density at TRIUMF are envisioned for 2013. A first flagship physics experiment, either the lifetime or gravity experiment, would be conducted in 2013 and beyond. In 2015 and beyond, an nEDM measurement could be pursued.

The UCN Source Project and Resource Requirements

The UCN source requires delivery of a 500 MeV proton beam at 40 μA to a new tungsten spallation target in the Meson Hall at TRIUMF. A new beam line and a fast kicker system are required to deliver beam to the new spallation target, with a pulsed time structure that would utilize on average 7% of the high intensity beam delivered to the Meson Hall, leaving the beam otherwise unaffected when not being delivered for UCN production. The MeV-scale spallation neutrons would be cooled via thermal equilibrium with cryogenic moderators at 20 K. Cold neutrons would become ultracold by downscattering in a superfluid ^{4}He volume, producing phonons; the resultant UCN would diffuse out of the ^{4}He for delivery to experiments. Shielding, cooling, and remote handling would be required for the target. The UCN cryostat would require liquid helium operated in a closed loop with a liquifier.

Detailed cost and manpower estimates were conducted in preparation for the Five-Year Plan and for the CFI New Initiatives Fund (NIF) request selected to be put forward by the University of Winnipeg. The overall project cost is C$10 million. TRIUMF would supply some matching funds. Funding for the physics experiments will be pursued through subsequent requests to NSERC and to other international funding sources.

Grant-Eligible Investigators and Other Collaborators

The Canadian grant-eligible UCN collaborators include: J. Martin (U. Winnipeg, spokesperson), J. Birchall, M. Gericke, S. Page, W. van Oers (Manitoba), E. Korkmaz (UNBC), M. Hayden (SFU), and L. Buchmann and C. Davis (TRIUMF).

Martin, Davis, Gericke, Hayden, and Page have directly relevant experience in cold or ultracold neutron research. Upon approval of the project, this core group is expected to expand and draw substantial international collaboration, particularly from the US and Japan. Several world experts from the US have already joined the collaboration including: R. Golub (NCSU), a key researcher who invented superfluid ^{4}He UCN source technology; J.D. Bowman (ORNL), a leading scientist in past and future nEDM searches, and B. Filippone (Caltech), T. Ito (LANL), and B. Plaster (Kentucky). The Japanese collaboration consists of large number of collaborators from RCNP Osaka, KEK, Osaka U., and U. Tokyo. Y. Masuda from KEK is the leader of the UCN source R&D project, and has successfully developed the only spallation driven superfluid ^{4}He UCN source in the world

6.4.3

Gamma-Ray Infrastructure for Fundamental Investigations of Nuclei: GRIFFIN

Introduction

GRIFFIN (Gamma-Ray Infrastructure for Fundamental Investigations of Nuclei) is a new state-of-the-art high-efficiency γ-ray spectrometer. Between 2010 and 2015, the period of TRIUMF's new Five-Year Plan, GRIFFIN will replace the current 8π spectrometer as the primary decay spectroscopy facility at ISAC-I. GRIFFIN will provide more than a 20-fold increase in absolute γ-ray detection efficiency, representing a 400-fold efficiency increase for γ⁻γ coincidence experiments. This enormous gain in detection efficiency will enable detailed studies of the most exotic radioactive beams produced by ISAC and its future target and driver upgrades at TRIUMF. With GRIFFIN, nuclear decay and structural properties will be measured for isotopes produced with intensities below 0.1 ions/s, extending the reach of ISAC experiments to

the extremes of neutron richness. It is the properties of these isotopes, many of which are completely unknown, that are the current focus of the worldwide nuclear structure community as they determine the pathways, time scales, and energy releases in the explosive astrophysical environments responsible for the synthesis of the heavy elements.

The GRIFFIN detectors will also be available for use in other ISAC applications in which high-efficiency and/or high-rate γ-ray detection is required. Examples include, but are not limited to, the search for new CP-violating fundamental interactions through precision electric dipole moment (EDM) searches with Rn isotopes at ISAC-I (S929), and high-efficiency decay spectroscopy at the focal plane of the EMMA recoil separator at ISAC-II. GRIFFIN will thus make major contributions to all of the nuclear structure, nuclear astrophysics, and fundamental symmetries programs at TRIUMF's ISAC facility.

"Full exploitation of the high-intensity radioactive beams for nuclear physics and nuclear astrophysics at ISAC and ISAC-II" was identified as one of the highest priority projects of the Canadian subatomic physics community for 2006–2016 in the recently completed NSERC Long-Range Plan. Through its dramatically increased γ-ray detection efficiency, GRIFFIN will enable the full exploitation of the rare-isotope beams produced not only by the current ISAC facility, but also by the second high-intensity proton beam line to ISAC, the actinide production targets, and the new electron linear accelerator proposed in this 2010–2015 TRIUMF Five-Year Plan.

Detailed Description of Apparatus

GRIFFIN will be composed of 16 unsegmented clover-type HPGe detectors. Similar to the TIGRESS γ-ray detectors, each of the GRIFFIN detectors will consist of 4 individual high-purity germanium (HPGe) crystals packed in a four-leaf clover geometry. The proposed geometry of GRIFFIN involves the construction of detectors with mechanical exterior dimensions identical to those of the TIGRESS (TRIUMF-ISAC Gamma-Ray Escape Suppressed Spectrometer) detectors in order to capitalize on the extensive developments for the mechanical support and rapid reconfiguration of these detectors that have been carried out by the TRIUMF design office and engineering staff over the past several years.

Unlike the TIGRESS detectors, which have been optimized for use in experiments with accelerated radioactive beams at ISAC-II and thus have highly segmented electrical contacts to provide γ-ray position resolution to reduce Doppler broadening effects, the GRIFFIN detectors are intended for use in decay experiments with stopped radioactive beams. In such experiments, Doppler shifts and broadening are not a concern. The GRIFFIN detector electrical contacts need not be segmented, and the interior design of the detectors can be optimized for both efficiency and mechanical robustness to enable simple redeployment of the detectors in a variety of ISAC applications. With the current design, the full GRIFFIN array will provide an absolute detection efficiency greater than 21% for 1 MeV γ-rays. This represents more than a 20-fold increase in efficiency compared to the current 8π spectrometer at ISAC-I and, for a typical $\gamma^{-}\gamma$ coincidence experiment, more than a 400-fold increase in detection efficiency. It is this enormous gain in detection efficiency provided

by GRIFFIN that will enable detailed spectroscopic studies of the most exotic radioactive beams produced by ISAC and its future target and driver upgrades.

In addition to the 16 HPGe clover detectors, GRIFFIN will also employ segmented bismuth-germanate (BGO) Compton suppression shields. These shields will provide both segment-specific vetoing of events in which γ-rays escape the HPGe volume, and the "active collimation" necessary to shield the HPGe detectors from background in experiments with low-intensity radioactive beams. As with TIGRESS, the GRIFFIN suppression shields will be mounted in a mechanical structure that enables rapid reconfiguration between a "maximum-efficiency" and an "optimal-suppression" configuration.

While the new GRIFFIN HPGe detectors, BGO suppression shields, and outer mechanical support structure will replace those of the current 8π spectrometer, all of the components of the 8π installation inside the beam line vacuum that have been developed over the past several years will be reused with GRIFFIN. These components include: the low-energy beam transport (LEBT) line itself, with its well-established optics and tuning; the in-vacuum tape transport system on which the radioactive beam is deposited at the centre of the array and then moved behind a lead shielding wall to remove long-lived daughter activities; the 20-element SCintillating Electron-Positron Tagging Array (SCEPTAR) plastic scintillator β-detector array inside the central vacuum chamber; and the 5-element Pentagonal Array for Conversion Electron Spectroscopy (PACES) liquid-nitrogen cooled Si(Li) detector array, also inside the central vacuum chamber. Further, 8 of the 10 BaF_2 γ-ray detectors of the Dipentagonal Array for Nuclear Timing Experiments (DANTE) will be reused with GRIFFIN to provide fast γ-ray timing information. GRIFFIN will thus continue to provide the full suite of detection capabilities for decay spectroscopy with radioactive beams that has been developed in association with the 8π spectrometer at ISAC-I, extended by the enormous increase in γ-ray detection efficiency provided by the state-of-the-art GRIFFIN HPGe clover detectors.

Resources Requested

The combination of advanced accelerator, target, and experimental facility developments at TRIUMF will enable the Canadian research community working at ISAC to maintain and enhance its international leadership in the production and use of rare-isotope radioactive beams. The community has thus rallied behind the GRIFFIN proposal, with current GRIFFIN collaboration representatives from TRIUMF and seven Canadian universities, including six Member and Associate Member universities of the TRIUMF joint venture. This collaboration is preparing the GRIFFIN funding proposal for submission to the Canada Foundation for Innovation (CFI) and the Ontario Ministry of Research and Innovation in 2008 as an application led by the University of Guelph. The total project cost is estimated at C$10.6 million over 4 years (2010–13), with the 20% matching contribution derived from vendor discounts and major in-kind contributions from TRIUMF (described below) to the design, installation, and support of GRIFFIN. GRIFFIN would become operational in 2013.

Partners

Guelph University, Laval University, McMaster University, l'Université de Montréal, Saint Mary's University, Simon Fraser University, and the University of Toronto.

TRIUMF's Role

TRIUMF will make major contributions to all of the design, installation, and support of GRIFFIN at ISAC-I. The mechanical mounting of GRIFFIN detectors will make extensive use of developments for TIGRESS carried out by the TRIUMF design office and verified by TRIUMF engineers. Additional contributions by the fesign office will be required for the installation of GRIFFIN at the current location of the 8π spectrometer in the ISAC-I hall. Machining of components for GRIFFIN will be carried out in parallel in the TRIUMF and Guelph machine shops, as well as by external contractors.

TRIUMF has provided a dedicated detector laboratory in the ISAC-II building for the testing and characterization of the TIGRESS γ-ray detectors, and this laboratory will also be used for the testing and maintenance of GRIFFIN detectors. TRIUMF staff designed, fabricated, and installed many components of the current 8π installation, including the dedicated low-energy beam-transport line to the 8π location, the central vacuum chamber, the SCEPTAR plastic scintillator β-detector array, the rails, stand and shielding wall for the in-vacuum tape transport system, electrical services, and an air conditioned electronics enclosure, all of which will be reused for GRIFFIN.

Three TRIUMF staff scientists (G.C. Ball, B. Davids, and G. Hackman) are currently members of the GRIFFIN collaboration. A dedicated TRIUMF technician will provide ongoing technical support for GRIFFIN, while a second technician will be required to coordinate the design, procurement, parts, and machining during the mechanical construction phase.

Members of the TRIUMF DAQ group (C. Pearson, P. Amaudruz) have been instrumental in the development and implementation of the custom waveform digitizer modules developed for the TIGRESS project. These modules will also be used for GRIFFIN, and members of the TRIUMF DAQ group will contribute to the implementation and ongoing support of the GRIFFIN data acquisition. Front-end readout, back-end workstations, and networks for GRIFFIN data acquisition will also be provided by TRIUMF.

6.4.4

ISAC Charged-Particle Spectroscopy Station: IRIS

Introduction

IRIS (ISAC Charged-Particle Spectroscopy Station) consists of a low-pressure ion chamber, a cryogenic, solid-hydrogen target, and a ΔE-E detector telescope consisting of silicon detectors and CsI. It will be used to study reaction dynamics of unstable nuclei and will extend ISAC-II's capabilities into a new area and exploit the neutron-rich beams the actinide target will make available.

Nuclei with extreme neutron-to-proton ratios offer a unique opportunity to probe the isospin dependences of nuclear interaction and properties that are inaccessible otherwise. These asymmetric nuclei also contribute to the synthesis of heavy elements. The unstable nuclei with large neutron excess are efficient means to gain insight into the properties of highly neutron-rich stellar environments such as neutron stars and supernovae. Studies of nuclear reactions provide a view to their internal structure and give the reaction rates governing nucleosynthesis.

Surprisingly, these asymmetric nuclei have features that are markedly different from the stable nuclei existing on Earth. The nuclear halo is the most exotic nuclear structure observed for very neutron-rich (or proton-rich) nuclei close to the edge of nuclear binding. The unknown exotic nature makes it crucial for experiments to unveil their structure and understand their interaction capabilities, including excitation mechanisms. Nucleon transfer reactions are the most sensitive traditional probes to understand the internal arrangement of nucleons inside a complex nucleus. These reactions are best performed at energies around 5*A* MeV. They are complementary to the knockout reactions employed at high energies and can therefore lead to a definitive understanding of nuclear structure.

Inelastic scattering of unstable nuclei offer the possibility of studying new modes of excitation that can occur due to exotic structures such as nuclear halo and skin. One such important mode is the soft dipole resonance mode where the excess neutrons can oscillate against the rest of the nucleus. These resonances are expected to occur at low excitation energies, and if they are located just above the neutron threshold, they can have significant impact on the fusion probability that leads to formation of heavy elements in our universe.

These reactions lead to the reaction residue being in its different excited states. One therefore needs to identify the residue in the different excited states. Due to the weak binding nature of these asymmetric nuclei, the unbound states in them have a strong impact on their structure and role in nucleosynthesis. The gamma detection has been used for observing bound excited states, *i.e.*, those below the neutron or proton threshold. The low yield of these nuclei often makes it difficult to rely solely on gamma spectroscopy because of limited gamma detection efficiency. Furthermore, it is impossible to observe the unbound states (located above the neutron threshold) by gamma detection. Reaction spectroscopy, through the precise detection of the light and heavy nuclei, *i.e.*, the charged particles, after the reactions is required to disentangle the nuclear levels and reaction channels. Internal arrangement in a nucleus and the nature of excitation can be studied from the angular distribution of the charged reaction residues. Charged-particle reaction spectroscopy is thus an important part of studying exotic nuclei and the IRIS CFI would, if funded, provide a charged-particle spectroscopy facility at ISAC-II.

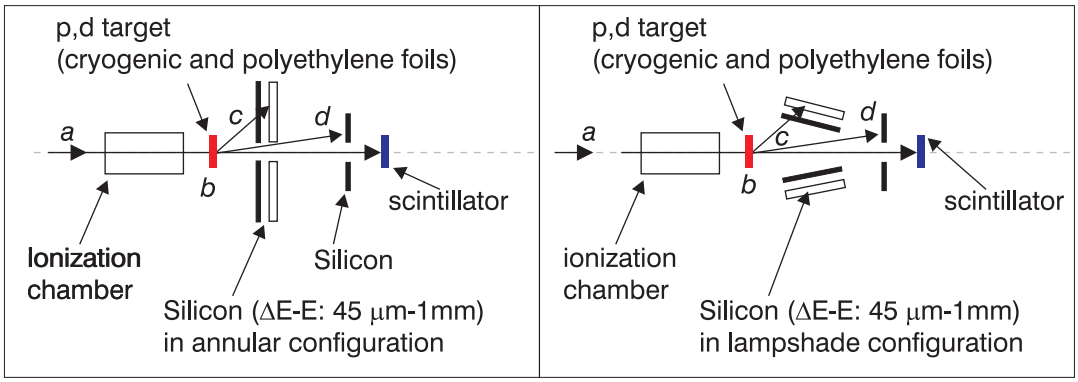

Figure 1: Layout of the proposed ISIS facility. Two different arrangements are shown for the silicon *E-E* detector telescope.

Detailed Description of Apparatus

The ISAC Charged-Particle Spectroscopy Station (IRIS) facility is being designed for nuclear reactions with $E \geq 3A$ MeV at ISAC-II (see Figure 1). Two-body reactions like $a+b \rightarrow c+d$ will be measured, where a = incident nucleus, b = light targets (*e.g., p, d),* c = light particle (*e.g.*, *p,d,t,*^{3}He) and d = recoiling nucleus. The beam of unstable nuclei first passes through an ionization chamber. This low-pressure ionization chamber counts the beam and identifies the isobaric contaminants in the beam through an energy-loss measurement in this detector. This will be the first time beam species have been identified on an event-by-event basis at an ISOL facility. This event-by-event identification is very important because the production of heavy unstable nuclei is often accompanied by substantial amounts of contamination from other nuclei with the same mass (isobaric contaminants). The fabrication of novel cryogenic solid ^{1}H, ^{2}H targets is envisioned. This will increase the reaction yield by an order of magnitude (compared to polyethylene targets such as CH_2 or CD_2), thereby extending the experimental reach to more neutron-rich or proton-rich species. For nuclei that can be produced with fairly high intensity, thin foil targets will be used. The scattering angles and energies of particles c and d will be measured using a position sensitive ΔE-E detector telescope. The telescope will be made of silicon strip detectors that measure the scattering angle of the particles and the energy loss, while a CsI detector placed directly behind the silicon stops the particles measuring its energy. The telescope can be in the form of an annulus or a lampshade, to allow the unreacted beam to pass through. A scintillator placed at zero degrees downstream of the telescope detects the un-reacted nuclei.

The facility can be used either as a stand-alone system or at the target station of the recoil spectrometer EMMA (ElectroMagnetic Mass Analyser). Either the focal plane detectors of EMMA or an annular silicon strip detector can be used to detect the recoiling nucleus *d*. The significant features of this facility are therefore: (a) cryogenic targets that increase the reaction yield by one order of magnitude; (b) identification of the incoming nuclei; and (c) the use of a flexible detector telescope system capable of ΔE-E identification of different reaction channels.

Resources Required

The nuclear science community supports the IRIS project, with current collaboration representatives from TRIUMF, four Canadian universities (all members of the Joint Venture), and one in Japan. This collaboration is preparing the IRIS funding proposal for submission to the Canada Foundation for Innovation (CFI) led by Saint Mary's University. The total project cost is estimated at C$1.2 million with major contributions from TRIUMF in the form of detector group support for ionization chamber fabrication R&D, DAQ support, and design office and machine shop support.

Partners

McMaster University, Osaka University, Simon Fraser University, Saint Mary's University, and the University of Guelph.

6.5

Broader Impacts

TRIUMF is strongly committed to undertaking high-impact research and delivering value beyond its pure research program. TRIUMF's skill in this latter area has grown into a string of success stories (see Section 4.4). The chief objectives of the current Five-Year Plan have been selected not only because of the opportunities they afford for high-impact scientific excellence, but also because of their potential for economic impact, their contribution towards commercialization of research, and their ability to attract top talent to Canada as well as retain it.

These objectives are explicit to TRIUMF's forward-looking vision, and this section will highlight just a few of the broader impacts that will arise when they are met. Subsection 6.5.1 focuses on the nuclear medicine program and the production and use of radioactive isotopes in medicine. Subsection 6.5.2 focuses on molecular and materials sciences and identifies a number of opportunities for practical applications. Subsection 6.5.3 discusses the commercialization of the superconducting radio-frequency cavity technology developed with TRIUMF's help. Finally, Subsection 6.5.4 highlights TRIUMF role in preparing the next generation of leaders.

Leading the Nuclear-Medicine Revolution

Functional imaging is aimed at gaining an understanding of basic biological processes, in essence asking the question: "What is the basis for health and disease?" It is similar to the question nuclear physicists ask as they probe the nature of fundamental matter. Trying to find a better way to diagnose disease is a driving force behind nuclear medicine. We are beginning to understand how

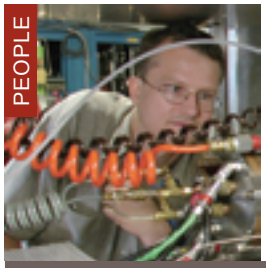

MORGAN DEHNEL

President, D-Pace, Inc.

Morgan Dehnel undertook his Ph.D. work at TRIUMF in Applied Accelerator Physics under British Columbia Science Council G.R.E.A.T. Scholarship collaboration. He utilized a 1 MeV test Cyclotron to develop the injection system for the TR-13 cyclotron and to make ground-breaking injected beam and central region beam measurements in close proximity to a spiral inflector. In 1995 he and his wife established Dehnel Consulting Ltd. (DCL) in Nelson, BC, Canada, and immediately proceeded to develop the Beamline Simulator software with his brother, computer scientist, Kurt Dehnel. Through a combination of NRC-IRAP grants, First Year in Science and Technology grants, and SRED credits, DCL was able to release the software for global sales in 1998. DCL provided charged particle transport system and component engineering consultation into the radioisotope production industry, the ion implanter industry, and for national laboratories such as TRIUMF. In 2001 DCL licensed a number of TRIUMF technologies including a negative hydrogen ion source, radiation detector, emittance scanner, wire scanner etc.. In 2004, DCL became Dehnel – Particle Accelerator Components & Engineering, Inc. (D-Pace) a new company formed by Dehnel and his brothers. The new company name highlighted a change of direction from strict consulting to the production and sale of accelerator components. D-Pace has been able to commercialize successfully the ion source, target, and detector technologies and to sell these technologies on a global basis. TRIUMF & D-Pace received the NSERC Synergy Award in 2007. ■

living species function through genome research and better diagnostic tools. Functional imaging touches on many aspects of health sciences and is an extremely sensitive tool for probing at all levels of health and disease.

TRIUMF works closely with the University of British Columbia, (UBC), the BC Cancer Agency (BCCA), and the Pacific Parkinson's Research Centre (PPRC) on research that may revolutionize the understanding of mental disease, cancer imaging, and their therapies. This work will result in a substantial expansion of the current medical isotope and life sciences programs and will launch a new national program in molecular imaging focused on neurodegenerative diseases and cancer.

The emerging revolution in nuclear medicine will dramatically change the way we deal with disease. New tracer molecules with attached unstable rare isotopes, called radiotracers, allow doctors to select and image specific metabolic activity associated with the growth of disease. It will soon be possible to "see" the progressive death of a cancer tumour after radiation treatment or chemotherapy. The success of the treatment would become obvious. If the treatment is ineffective, the doctor could quickly change the approach. The number of lives saved, and the reduced costs of treatments, are expected to be enormous. It is anticipated that thousands of such tracers will eventually be developed and used in the detection and treatment of neurodegenerative diseases such as Parkinson's and Alzheimer's as well as all forms of cancer. Canada and BC are world leaders in producing medical isotopes and employing molecular imaging using positron emission tomography (PET). When combined with the advances in custom-designed tracer molecules, the ability to monitor microscopic disease progression during treatment will become possible and perhaps even routine.

Because medicine/biological studies do not require the type of infrastructure that is required for astrophysics or particle physics, it is extremely difficult to carve out a unique place in the world as, for example, ISAC or μSR can. The holdback in functional imaging is achieving a critical mass of specific specialties to advance the understanding of biological functioning. The strength of the TRIUMF life sciences program has been its ability to focus. TRIUMF has been fortunate to be able to focus and use PET as it should, as an analytical tool to probe fundamental questions.

The new nuclear medicine initiative proposed for TRIUMF will have profound implications for the future of Canada's role in the production and innovation of medical isotopes. While TRIUMF does not directly manufacture or distribute medical isotopes, its research activities and key industrial partnerships will enable breakthroughs innovations. The nuclear medicine laboratories located in the new TRUMF nuclear medicine building will allow researchers to work alongside technicians from MDS Nordion and clinicians from UBC and BCCA to develop new applications of medical isotopes.

The radioactive isotope itself is only useful when it is chemically attached to an existing molecule that has biological function or selectivity. Future "personalized medicine" will rely on accurately and precisely "labelling" numerous biologically active molecules with these medical isotopes. Once labelled, these tracers can be used in human health research or in the clinic to tag and identify cancer tumours, and other diseases in the body. As more and more countries around the world develop the capacity to make their own medical isotopes domestically, the Canadian share of the world market will dwindle. The type of research to be performed in this dedicated nuclear medi-

cine suite of laboratories will add significant value to the medical isotope product and ensure Canada's dominance of the market. TRIUMF and UBC together are leading a national proposal to form a virtual network of nuclear medicine laboratories to shorten the "time-to-clinic" cycle of purchasing, installing, testing, and the using a cyclotron in hospitals. The nuclear medicine initiative at TRIUMF will underpin a national initiative that will allow hospitals to more quickly gain the expertise and flexibility of using on-site cyclotrons for medical imaging.

At present, the medical isotopes produced with cyclotrons like those at TRIUMF, MDS Nordion, and a half-dozen other cancer centres in Canada are distinct from those produced in nuclear reactors such as Chalk River but that may change. The TRIUMF proposal includes the construction and operation of a new type of accelerator that will allow very heavy isotopes to be produced in a beam rather than from the inside of a nuclear reactor. The accelerator will be sited in the underground tunnel that connects to the proposed new TRIUMF nuclear medicine building. These accelerator-produced isotopes can be harvested to provide a modest supply of medically relevant isotopes such as ^{211}At or even ^{99}Mo. TRIUMF's breakthrough research in this area is not currently capable of producing a commercially viable supply of these isotopes, but it will only be a matter of a few years of concentrated engineering effort to tune the system for scalable solutions. With alpha emitters, the best potential will be with ^{211}Rn, which is the precursor for ^{211}At, an alpha emitting nuclide that is being explored by many institutions. It is traditionally made by bombarding ^{209}Bi with alpha particles, but there are very few alpha producing cyclotrons.

It is difficult to speculate on the future growth of Canadian production capacity in terms of quantitative numbers. If MDS Nordion matches the growth that TRIUMF envisions in this area, and if Canadian health authorities adopt modern nuclear medicine imaging standards that are in play in the United States and Europe, one could see the TRIUMF-MDS Nordion contribution doubling from an annual level of patient doses from 2.5 million to 5.0 million.

Although it is not easy to compute the economic impact of selecting the "right" cancer therapy early in the treatment process, the impact on the lives of Canadians is dramatic. A 2007 clinical study in France reported that for the case of colorectal cancer, PET imaging saved more than US$5,000 on average per patient for successful management of the disease. Other studies report as much as US$32,000 of savings per patient. Integration of PET into the pre-surgical evaluation of patients with hepatic metastases also likely reduced overall costs and patients' morbidity. However, the main motivation for the new developments is not to save money on treating already curable diseases but to address incurable ones.

As a matter of course, TRIUMF will continue to operate its Applied Technology Group for applied-isotope production at MDS Nordion.

Molecular and Materials Science

Ultra-low-energy muon beams have the potential to revolutionize μSR, having recently demonstrated their applicability to investigations of surfaces, thin-films, and multi-layered compounds by addressing some longstanding issues in condensed matter physics. These structures are important for future technologies.

With a significant increase of ^{8}Li beam because of the e-linac, a -NMR user facility will become feasible and open a new avenue for condensed matter research in thin-film hetero-structures, with high potential impact. There is no comparable facility in the world, except the low-energy SR facility at the Paul Scherrer Institute (PSI) near Zurich. The ISAC beams are much more intense than the moderated low-energy muon beams and the facility is already much more capable of running many different types of measurements, although -NMR has far less beam time per year. The proposed plans will address this shortfall.

Similar types of probes of matter, μSR and β-NMR are implanted particles that sense the environment of the material they are implanted in and report this information through a special property of their beta decay. They are complementary in the implantation process. The low-energy ion beams are near-surface probes, and their implantation depth can be varied; they are depth controlled. In contrast, muons always go far into the bulk of the material, and there is no practical way at TRIUMF to control their implantation depth significantly. The -NMR probes have a range of radioactive lifetimes that are much longer than the muon lifetime, making them sensitive to phenomena that the muon is not. Conversely, the muon can be used in situations where the -NMR probes are not useful because their lifetimes are much longer than an intrinsic time scale for magnetic relaxation in the system.

The ISAC -NMR facility is unique. Other -NMR facilities exist, but none combine laser polarization separated from the sample, low beam energies, and electrostatic deceleration to vary implantation depth, high beam intensities, and high experimental magnetic fields.

Biological Applications

The extreme sensitivity of the μSR technique to dynamics and weak magnetism makes it a potential tool for obtaining microscopic information in biological systems. One application is the study of structural and functional properties of macromolecules. For example, the μSR method has been demonstrated to be sensitive to the electron transfer process in the important protein cytochrome c. Although used only sparingly thus far for studies of this nature, future exploitation of the μSR technique will likely include increased biological applications.

Destruction of Toxic Waste

Muonium studies in sub and supercritical water provide unique information on a simple hydrophobic solute (H atom) in water over a wide range of temperature and pressure. The knowledge gained from studies of muonium reaction kinetics under such extreme conditions is required for the development of supercritical water reactors for the destruction of toxic waste, and is relevant to the radiation chemistry that occurs in the cooling cycle of pressurized water nuclear reactors.

Electron Transport in Non-Metals

Many non-conducting materials become ionized in high electric fields, resulting in an excess of “free” electrons. The material then becomes conducting. This phenomenon, known as electrical breakdown is a serious problem for

high-voltage equipment, such as power transformers, because the high voltage cannot be maintained as charge flows through the insulating material. The μSR technique has provided detailed knowledge about the transport mechanisms of radiolysis electrons in insulators by way of quantitative measurements of the mobility of charge carriers liberated in the muon's ionization track. An electric field (EF)-μSR technique has been applied to various rare gas (Ne, Ar, and Xe) solids ("cryocrystals") to study the effects of electric field on the formation of muonium arising from radiolysis electrons that have enough mobility to reach the stopped μ^+. These studies have direct consequences for the design of rare-gas-charged particle detectors. The EF-μSR method has also been extended to the investigation of muonium formation via transport of radiolysis electrons in more conventional insulators and semiconductors, such as sapphire, quartz, Si and GaAs.

Conducting Polymers

The μSR technique is well suited to probe local charge transport processes in conducting polymers. The pliability and unique electronic and optoelectronic properties of these polymers make them candidates for such uses as in plastic solar cells, solid-state lasers, and flexible light-emitting diodes. The increasing technological importance of these materials is driving a large effort in industry to improve their stability, lifetime, and efficiency. In the undoped state of a conducting polymer, such as polyphenylenevinylene, muon implantation leads to the formation of a highly mobile negative polaron through the reaction of muonium with the polymer chains. Measurements of the intra-chain and inter-chain polaron diffusion rates are of fundamental importance in the development of these synthetic conductors, contributing significantly to our understanding of the charge transport mechanisms.

Ion Mobility

The μSR technique may be used to study ion mobility in materials by monitoring changes in the relaxation of the muon spin by the nuclear magnetic moment of the ion. μSR has been used to determine the mobility of Li^+ ions in $Li_x[Mn_{1.96}Li_{0.04}]O_4$. Such Li-based compounds are promising for use as cathode materials in rechargeable batteries. The μSR measurements indicate that the onset temperature of Li^+ diffusion can be varied with changes in Li concentration and thus provide information relevant to optimizing battery performance.

Semiconductors

As a trace impurity, atomic hydrogen (H) can have a profound effect on the electronic properties of semiconductors. It can "passivate" the electrical activity of donors and acceptors in crystalline semiconductors, "hydrogenate" dangling bonds in amorphous semiconductors, and even display its own electrical activity, all of which are important in the process of semiconductor fabrication. For low hydrogen concentrations, microscopic details of how these processes occur are not accessible by standard magnetic resonance techniques. Isolated atomic hydrogen is nearly impossible to detect because of its high diffusivity and reactivity with other defects. Most of the experimental information on isolated hydrogen in technologically important semiconduc-

tors comes from μSR studies of muonium (Mu μ+e⁻) which can exist in three charge states (Mu^0, Mu^+ and Mu^-) corresponding to the three distinct charge states of isolated hydrogen (H^0, H^+ and H^-) in semiconductors. As an experimental model for isolated hydrogen, μSR studies of semiconductors are the primary source of detailed information on the site migrations and dynamics of the charge states as well as how muonium diffuses and interacts with charge carriers.

Molecular Magnets and Clusters

Molecular-based magnets are a relatively new class of synthetic materials, made up of nanometer-sized molecules containing a handful of interacting magnetic ions. A versatile feature of these systems is that chemists can modify the magnetic interactions within and between neighboring molecules in a controlled manner. Inorganic materials composed of well-defined clusters of magnetically active atoms are also of great current interest. There are numerous anticipated technological and biomedical applications of molecular magnets, such as components of quantum computing, photonic switches, catalysts, magnetic filtering of blood, and the enhancement of magnetic resonance imaging signals. A high priority in this new field is the determination of the local magnetic properties. As a unique local probe of magnetism, μSR is being used more and more to provide microscopic information on the static and dynamical magnetic properties of these systems. Future studies of molecular magnets with the μSR technique will contribute significantly to the development and optimization of their magnetic properties.

Colossal Magnetoresistance

Colossal magnetoresistance, whereby the electrical resistance of a material changes by orders of magnitude in the presence of an external magnetic field, occurs in certain manganese-oxide compounds. This property makes these materials appealing for future use in a wide range of electronic devices, such as read heads for hard disks, magnetic storage, and sensing devices. The μSR technique has provided important, new information on the spin dynamics in these systems that can be combined with the structural and transport information obtained by other experimental methods.

Superconducting Radio-Frequency Cavity Technology

The electron linac (e-linac) and its future photo-fission-based actinide target station represent a major laboratory infrastructure initiative for the 2010–2015 Five-Year Plan. It will provide an additional source of neutron-rich isotopes for nuclear physics and of ^{8}Li for β-NMR studies in molecular and materials science. The accelerator will be based on the 1.3 GHz superconducting radio frequency (SRF) technology that absorbs the latest advancements in the field from the frontier International Linear Collider (ILC) design. A major distinction of the e-linac is its continuous wave (CW) mode of operation. TRIUMF's R&D efforts toward improvement of high-power components for the machine, such as RF input couplers, will benefit all future megawatt-regime facilities, such as energy recovery linacs (ERLs) and next-generation synchrotron light sources.

SRF as a Core Competency and Partnering with Industry

The majority of all new and proposed accelerators are based on SRF technology. The tremendous progress made in the last decades has proven this technology to be reliable, cost-effective, and capable of delivering beams of the highest quality and precision. Developing SRF into a core competency of TRIUMF will train highly qualified people for Canadian industry. It will transform Canada from a purchaser of SRF technology to a nation with the capability to construct, process and sell niobium cavities and their attendant components. Presently, there are only a few SRF-technology vendors worldwide, but TRIUMF, through its collaboration with PAVAC, will be able to join this elite group. TRIUMF will be able contribute to the ILC design and to the development of the CERN Large Hadron Collider (LHC) and its upgraded injector, the superconducting proton linac (SPL). Both of these high-energy facilities have strong interest from the Canadian university community.

Around the world, superconducting electron linacs (SC-linacs) are being proposed as drivers for fourth-generation light sources; future reconfiguration of the e-linac as an ERL opens the door to such a possibility. A shortcut to high-energy X-rays is proposed via inverse Compton scattering (ICS) of optical photons off hundreds MeV electrons. ICS has applications in molecular and materials science and medical imaging. E-linac could serve as a testbed for the enabling technologies for an ICS source at the Canadian Light Source (CLS) in Saskatoon.

By adding new SRF expertise in 1.3 GHz cavities design to the existing capabilities developed with ISAC-II SC-linac construction, TRIUMF will become a unique centre for SRF science and accelerator physics. The world physics community will propose, based on discoveries at the LHC, whether a major new initiative called the International Linear Collider (ILC) will move to project approval around 2012, or whether the LHC accelerator and detectors will be upgraded to be more sensitive to new physics. Canadian scientists are leaders in the international design effort for the ILC. The ILC is an ambitious project, initiated by all three regions of the world, and Canadian scientists and industry are well positioned to contribute to the SRF-based linear accelerator and detectors.

Preparing the Next Generation of Leaders

TRIUMF's five-year vision promises a positive impact on Canada's science and technology workforce. Increasing the beam time in the ISAC program, as envisioned in the Plan, will not only increase the science output, it will also increase, commensurately, the opportunities to train students. The impact will be especially large in -NMR where the program is expected to become a true user facility with a correspondingly large increase in the number of students involved in the program. The e-linac and other accelerator project will position TRIUMF to work with the universities to establish the first graduate program in accelerator physics in Canada. This program will further enhance Canada's high tech capabilities in all areas that use particle accelerators, whether for

synchrotron light sources used in materials science research or for cyclotrons located in hospitals for medical use.

A vigorous TRIUMF community will serve as an inspiration to young Canadians to pursue careers in science and technology. The TRIUMF outreach program will introduce people to science and technology, not as something other people do, but as something they can do. TRIUMF personnel will be role models to show that all Canadians, whether from Vancouver, BC, or Centre Musquodoboit, NS, can compete with the best in the world.

Selected elements of the TRIUMF Outreach Program envisioned for 2010–2015 include:

- Continued public tours, serving more than 1,000 visitors each year.
- Undergraduate student programs
  - National scholarships for undergraduate students for summer research programs at TRIUMF.
  - Co-operative education placements for students from all across Canada for three-month work terms in the laboratory.
- High-school student programs
  - Continued partnership with British Columbia Innovation Council for scholarships to high-school students for summer research experiences at TRIUMF.
  - Monthly high-school physics lectures during the academic year co-hosted with the University of British Columbia Department of Physics and Astronomy featuring modern science topics in everyday plain language.
  - Design and production of additional multimedia educational materials, including digitally animated movies on high-school physics topics.
- High-school teacher programs
  - Internship program for teachers to travel to and spend about a week working with researchers on an active experiment; candidates are competitively selected.
  - Fellowship programs providing support for one teacher per year to spend up to six months conducting research at TRIUMF and developing educational materials for their classroom.
  - Biannual professional-development day hosted at TRIUMF in cooperation with the British Columbia Association of Physics Teachers.
- Continuation of the TRIUMF Summer Institute.
- New programs engaging the local community.

Although formal impact assessments of science outreach and education activities are still a hotly debated topic in the professional assessment community, TRIUMF proposes to use a combination of journals, surveys, longitudinal studies, and independent evaluations to judge the impact of its activities. The TRIUMF Outreach Program anticipates rigorous interpretation of new “teach-

ing and learning of science" methodologies, such as those outlined in the 2007 U.S. National Academies report *Taking Science to School.*

Conclusion

TRIUMF's Five-Year Plan offers significant opportunities for economic and social impact through the development of critical technologies, recruitment, and training of new talent in science and engineering, and the direct commercialization of its research into the marketplace.

6.6

Implementation Scenarios

6.6.1

Introduction

As a publicly funded enterprise, the TRIUMF Five-Year Plan seeks to follow the four investment principles recommended by the Government of Canada for science and technology to foster a national competitive advantage:[1]

- Promoting world-class excellence;
- Focusing on national priorities, particularly in areas of strength and opportunity;
- Encouraging partnerships; particularly with the private sector and international organizations; and
- Enhancing accountability.

Recognizing that public funding decisions are difficult, this section also presents several alternative scenarios for TRIUMF programs (from 2010–2015), computes the corresponding funding levels, and examines the tradeoffs. Efforts were made to balance the portfolio of activities for diversity and to guarantee smooth and reasonable profiles for both financial and human resources over the five-year period. Three primary scenarios for the laboratory program are developed and analyzed:

A. **Optimal return on investment.** Provide the maximal return on the current investments in the laboratory while also developing infrastructure to ensure Canada's long-term national and international leadership. Where possible, this scenario builds on the successes and strong suits

1 Government of Canada, *Mobilizing Science and Technology to Canada's Advantage*, 2007, p. 4-5.

that have long-term advantages in terms of global market share for Canada.

B. **Ensuring international leadership.** Sacrifice short-term research and development activities to devote all possible financial and human resources to securing globally competitive advantages in the future. While ensuring generally smooth resource profiles, this scenario does not fully exploit the present capital investments but rather focuses on maximally pursuing the emerging opportunities that will have the most strategic advantage for Canada. This scenario seeks a long-term "win" while accepting short-term "losses."

C. **Exploiting current facilities.** This implementation strategy seeks to minimize new capital outlays while maximizing return on existing investments. That is, it seeks to reap the benefits of past investments in TRIUMF without any preparations for the long-term future of the on-site accelerator-based program. The scenario includes modest maintenance of present facilities coupled with minor upgrades to deliver a streamlined laboratory that delivers maximum short-term benefit at the risk of long-term competitiveness. For instance, options to capitalize on emerging technologies will be kept at a minimum.

For completeness, a fourth scenario (D) of so-called "flat-flat" funding was examined with a five-year total budget identical to that of the 2005–2010 Plan: $222 million via the National Research Council (NRC) Contribution Agreement. This funding level corresponds to a real funding drop in NRC funding levels due to inflation. Note that the total federal government funding to TRIUMF for 2005–2010, including NRC and CFI, was about $247 million, so the $222 million scenario represents a deeper cut in federal spending than just the effect of inflation.

6.6.2

The Planning Process

To develop its Five-Year Plan (5YP), TRIUMF and its user community engaged in a comprehensive series of exercises to identify the best possible opportunities that were ripe for investment, that made sense for TRIUMF, and would deliver the best value to Canada. The guiding principle of this planning process was to capture the best possible options and then to examine them rigorously in terms of schedule, resource requirements, feasibility, broader impacts, and overall priority.

The first step in preparing the decadal vision was to identify the principal activities in the 2010–2015 period that would involve TRIUMF. As expected, given TRIUMF's unique capabilities and the strong community interest in the laboratory's capabilities, we identified significantly more demand on TRIUMF's resources than could be reasonably accommodated. Therefore, the 5YP planning process became not only about which science to pursue but also about where to allocate resources. Several of the larger-scale initiatives also faced additional targeted reviews to ensure maximal clarity about their scientific impact, resource requirements, and feasibility.

TRIUMF serves the nation of Canada, and thus the support and guidance of the broad community was essential for its future. To start the formal planning process, the TRIUMF Users Group, under the chairmanship of P. Garrett (University of Guelph), organized a public meeting in July 2006 to discuss future research opportunities involving TRIUMF's unique combination of skills, resources, and capabilities. More than a hundred Canadian scientists in the broader TRIUMF community attended the meeting. An important fraction of American and international researchers also participated. The outcome of the

meeting was a series of summary talks and white papers that were discussed at a follow-up meeting in December 2006. Another follow-up meeting in August 2007 expanded an initial list of possible future activities at TRIUMF and examined the synergies, overlaps, and conflicts among them.[1]

To facilitate and guide the process going forward, the TRIUMF Director appointed a Five-Year Plan Steering Committee (5YPSC). The subsequent steps of the process are summarized below; Appendix D provides additional information about these steps of the process including committee membership, meeting agendas, and locations of review reports, all of which are publicly available.[2]

- **STEP ONE: Community consultation to develop a complete list of proposed future activities for TRIUMF in the timeframe 2010–2015.** Using materials prepared by the TRIUMF Users Group (TUG) at their Annual General Meetings, a preliminary list was prepared. With the gracious assistance of IPP, CINP, several divisions of CAP, and the TRIUMF Users Executive Committee (TUEC), this list was distributed broadly to the community for comment. Feedback was received through Monday, February 4, 2008.
- **STEP TWO: Preparation of short few-page descriptions of every proposed activity in close consultation with its proponents.** Along with a preliminary vision statement from the director, we prepared a proposed description of the role that TRIUMF plays in the Canadian university research program, and a discussion of TRIUMF's role as a gateway to international science and technology. These few-page descriptions were made public on March 1, 2008.
- **STEP THREE: Community review and prioritization.** The Policy and Planning Advisory Committee (PPAC) was formed by the TRIUMF Board of Management (BOM) in autumn 2007. Its inaugural task was to review this portfolio of materials and perform an initial assessment and prioritization. This process was completed at the March 14-15, 2008, meeting of PPAC. In addition to this global review by PPAC, key proposed elements of the Five-Year Plan were subjected to intense scrutiny by the following ad hoc committees.
    - Subatomic physics projects were reviewed by an international scientific committee (the Special Subatomic Physics Experiments Evaluation Committee) on March 25-26, 2008.
    - The TRIUMF nuclear physics program in halo nuclei was analyzed in an international context at a special workshop convened by Saint Mary's University on March 27-28, 2008.
    - Life sciences and nuclear medicine projects were reviewed by an international scientific committee (the Life Sciences Projects Evaluation Committee) on April 3-4, 2008.

1 See the TUG Web site and links to meetings therein at http://www.triumf.ca/tug/

2 See the TRIUMF Five-Year Plan Web site and references therein at http://admin.triumf.ca/facility/5yp/overview.php

  - The technical, resource, and schedule aspects of the major accelerator projects were reviewed by an international panel of experts, the Accelerator Advisory Committee, on April 3-4, 2008.

- **STEP FOUR: Comments from the TRIUMF community via the Kitchen Cabinet.** The director is advised on policy-implementation issues by an on-site committee of scientists and technical staff called the Kitchen Cabinet Advisory Committee. This committee was publicly tasked to provide a reality check on the PPAC findings and recommendations. The committee prepared a brief public report that was publicly released on Thursday, March 20, 2008.
- **STEP FIVE: Comments from the TRIUMF Users Executive Committee (TUEC).** As the originators of the process, TUEC was consulted to provide further comments on the series of reports. Their written report was released on April 8, 2008.
- **STEP SIX: Preparation of a complete draft of the TRIUMF five-year vision and review by ACOT.** Combining all these contributions, the 5YPSC prepared a complete draft of the five-year vision for TRIUMF, including a resource needs analysis. A working draft of the vision was presented and discussed at the TRIUMF BOM meeting on April 11, 2008. The evidence layer of the report was publicly presented to the Advisory Committee on TRIUMF (ACOT) in advance of its meeting on May 9-10, 2008. The draft report was publicly circulated and posted on-line for review and comment; the PPAC was invited to comment in writing.
- **STEP SEVEN: Writing of the full Five-Year Plan Report.** Incorporating the guidance of ACOT, the 5YPSC revised the written report and prepared a final draft, which articulated the decadal vision and the five-year budget request. This report will be submitted to the NRC International Peer Review Committee in late summer 2008.
- **STEP EIGHT: Presentation to and review of the TRIUMF Five-Year Plan Report by the NRC International Peer Review Committee in September 2008.** The International Peer Review Committee will meet on September 24-26, 2008, to evaluate the 5YP. The full 5YP Report, with any sensitive financial information redacted, will be publicly available.
- **STEP NINE: Presentation of the Five-Year Plan to the NRC Council in February 2009.** This step represents the formal transmission of the TRIUMF request to Industry Canada. In addition to the written package of materials transmitted to NRC Council, the TRIUMF Director and the Chair of the International Peer Review Committee will testify in person.

Each step in this process added focus to TRIUMF's five-year vision and added a more sophisticated understanding of resources and talents required. In other words, the "wish list" drawn up in step one was refined and tuned at each step in the process to arrive at the one in the final plan that emerged in step nine. Although different committees used different relative weighting schemes in their "wish list" deliberations, three consistent sets of criteria were used by all. These were:

- **Scientific merit:** potential for scientific impact and overall research excellence, including the overall technical feasibility and readiness for investment;
- **Broader impacts:** opportunities for training of students, attracting talent to Canada, transferring knowledge to industry, or contributing to the health and well-being of Canadians; and
- **Relevance to the TRIUMF Mission:** alignment with TRIUMF's mission statement in terms of its international presence and its role within the Canadian university system.

6.6.3

Building the Optimal Strategy for the TRIUMF Five-Year Plan

As a first step, all the 2010–2015 proposed projects were considered that were ranked with high priority by the review committees. Taken in full, these proposals would have required more than $370 million in federal funds and an increase in personnel too large to be obtained quickly and managed efficiently. While it was clear that a more manageable program would be needed to optimize the cost/benefit of the public investment in TRIUMF, it was also clear that reducing the program would require difficult choices. Faced with many proposals, each with a compelling potential for scientific impact, a program-planning framework was developed to analyze the resource requirements and map the high-priority activities into scenarios that addressed and resolved issues such as resource profiles, phasing and staging of projects, personnel skill sets, and international partnerships and agreements. Three distinct implementation strategies were studied in the framework, giving rise to the following scenarios.

	SCENARIO A *Optimal*	
	PEOPLE	**CAPITAL ($k)**
OPERATIONAL COSTS		
NET POWER COSTS		15,000
ADMINISTRATIVE SUPPORT		6,700
ISAC BEAM DEVELOPMENT		3,000
SITE INFRASTRUCTURE		8,000
SAFETY & LICENSING		2,300
ACCELERATOR DIVISION		10,000
ENGINEERING DIVISION		7,000
UNIVERSITY SCIENCE/EXPT SUPPORT		5,000
SCIENCE OPERATIONS-EXPT SUPPORT		10,000
LAB OPERATIONS TOTALS	250	67,000
NEW PROJECTS		
ATLAS TIER-1 CENTRE	10	9,300
FRONT END	5	3,500
TARGET STATION 1	9	8,000
SPECIALIZED ACTINIDE BEAM LINE	8	4,500
ACC REF & UPGR TO 300μA	12	4,000
HELIUM LIQUEFACTION	1	1,250
LIFE SCIENCES	8	5,400
E-LINAC	22	15,500
SNOLAB	3	100
INTL ACCELERATOR CONTRIBUTIONS	4	4,000
DETECTOR DEVELOPMENT/SUPPORT	5	200
NEW PROJECTS TOTALS	**87**	**55,750**
TOTAL PERSONNEL REQUIRED	**337**	
TOTAL MATERIALS BUDGET		**122,750**
NEW HIRES	20	
TOTAL SALARY BUDGET		**205,000**
TOTAL BUDGET ESTIMATE		**327,750**

Table 1: Five-year spending plan for TRIUMF from the federal government in the “Optimal” scenario.

Scenario A: Optimal Return on Investment

TRIUMF, with its university and user communities, seeks to provide the maximal return on the current investments in the laboratory while also developing infrastructure to ensure Canada's long-term national and international leadership. The spending plan for this scenario is presented in Table 1. Rather than attempt to pursue all the high-priority programs immediately, the major new projects were profiled in a way that would allow the lab to maintain a realistic staffing level. At the present time, TRIUMF's staff complement (excluding employees managing the TRIUMF guest house and working on a contract basis for MDS Nordion) is 317.

In this scenario, TRIUMF operations would be supported at a level where the lab is able to exploit fully the previous investments in ISAC, ATLAS at the Large Hadron Collider (LHC), T2K, molecular and materials science, and nuclear medicine. Industrial and international partnerships would be strongly exploited. The new ISAC program would proceed aggressively with the electron linear accelerator (e-linac) and new target station, which are fast-tracked to begin operations in 2013, and the specialized actinide beam line, which would be operational by 2015. These projects are closely linked both scientifically and technically and should proceed most efficiently together.

By re-profiling in the above manner, TRIUMF can maintain realistic staffing levels and move people from construction to operations as the new projects come on-line. Approximately ten new strategic hires above the current TRIUMF staffing levels, primarily in the accelerator division, would be required in this scenario in addition to shifting the ATLAS Tier-1 Data Centre personnel from CFI to NRC funding.

The benefits of this scenario would be:

- Complete the initial e-linac and new target station by 2013; the launch of a new prong in the ISAC program, including neutron-rich nuclear physics; more than doubling the running time of all ISAC experiments, and increasing β-NMR running from 4 to 16 weeks/year: all of which will cement TRIUMF's and Canada's role as leaders in the international accelerator network. The new ISAC-specialized actinide beam line would be operational by 2015 (options for advancing the schedule are being studied). The e-linac and new proton beam line, together with the new target station, are tightly linked and use overlapping space and common infrastructure, and therefore it is cost effective to proceed with them together. As the new projects come online, significantly more beam time will be available from the existing beam line for neutron deficient astrophysics studies.
- Contribute significantly to the design stage of the LHC superconducting proton linac (SPL) and the International Linear Collider (ILC) accelerator programs, including engagement of Canadian industrial partners, such as PAVAC Industries, Inc.
- Maximize the laboratory on-site accelerator operations at a high level, maximize physics output of ISAC, and capture the full advantage of this facility's present capabilities.

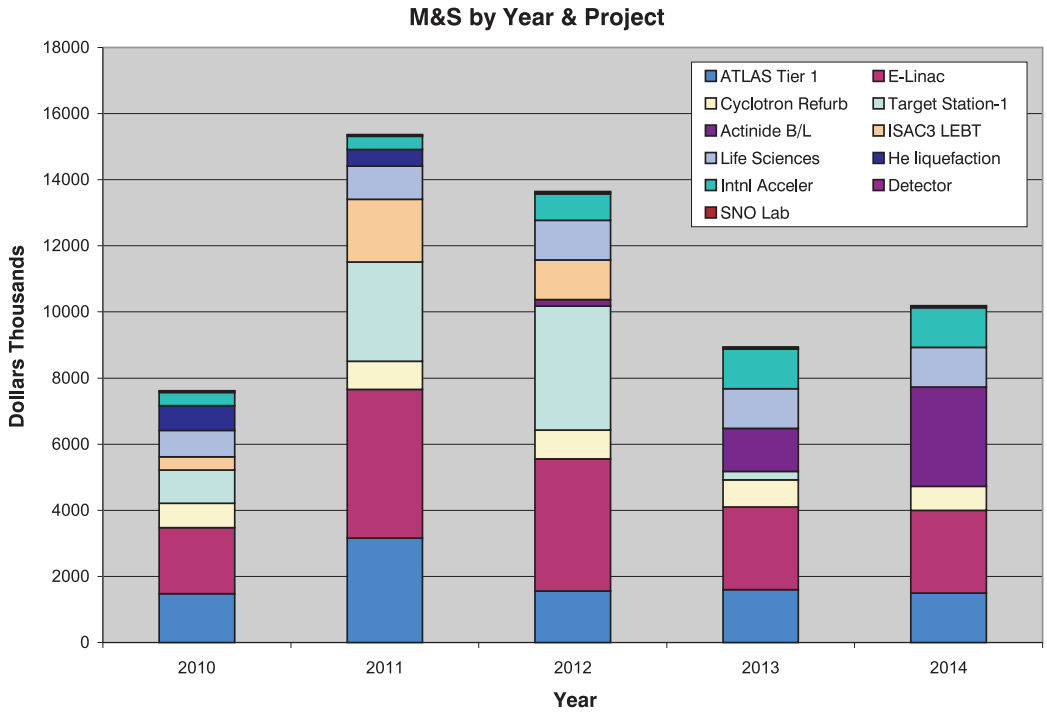

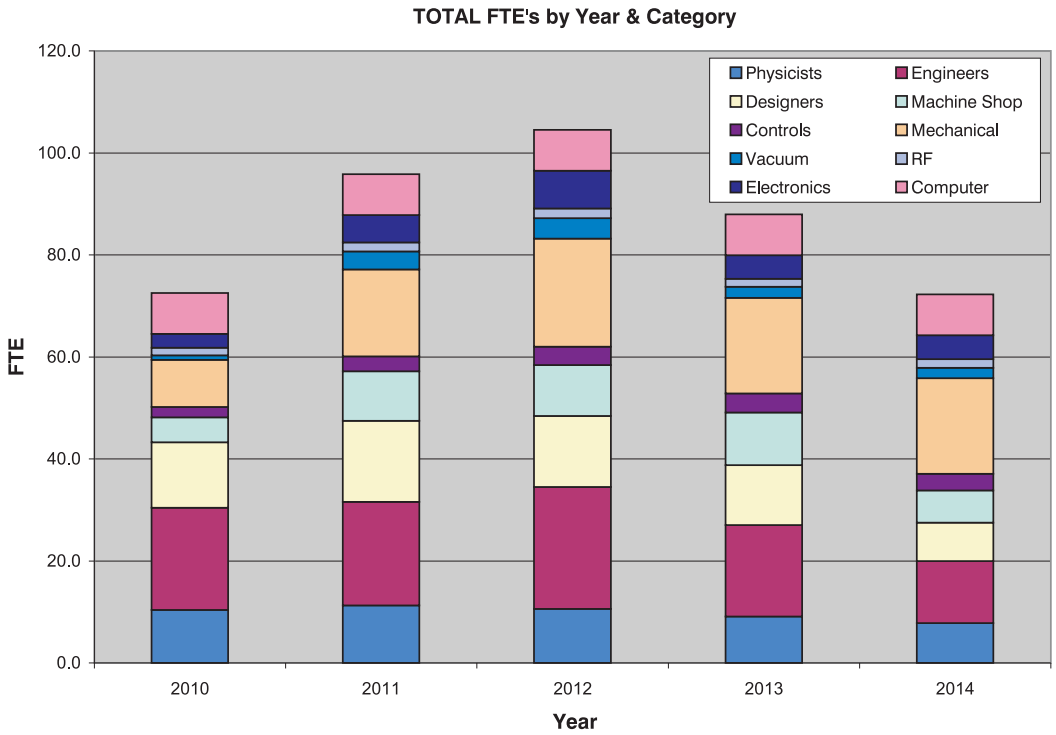

Figure 1: Spending (top) and personnel (bottom) profiles for the new projects in the "optimal return on investment" scenario.

- Exploit the current proton ISAC beam line, including low-power actinide target operations with the existing beam line as well as beam development for neutron deficient astrophysics measurement.
- Support and grow the ATLAS Tier-1 Data Centre, including strong intellectual contributions to the emerging computing grid application field.
- Establish a TRIUMF-based ATLAS national analysis centre.
- Enhance the TRIUMF theory group to exploit synergies with the experimental program and other theory institutes in Canada such as the Perimeter Institute.
- Consolidate nuclear medicine and on-site radioisotope production and enhance commercialization aspects.
- Initiate the new Osaka ultracold neutron program, starting physics late in the planning period.
- Upgrade the cyclotron, pacing it for increased intensities towards the end of the planning period when the new beam line is fully operational.
- Maximize scientific output from the newly constructed μSR beam lines and experimental stations for materials science.
- Continue support for university researcher-led efforts concentrated at TRIUMF.
- Maintain TRIUMF's contributions to particle detector research, development, and construction, with contributions to the SNOLAB project as the top priority in this area.

This program requires $328 million in total federal funding. The breakdown of materials, supplies, and personnel costs are shown for the new projects in Figure 1. The year-by-year breakdown of the total budget required to fulfill the program is shown in Table 1.

	2010	2011	2012	2013	2014	2010-2014
TOTAL SALARY BUDGET	35,000	39,000	42,000	43,500	45,500	**205,000**
TOTAL MATERIALS BUDGET	19,365	27,470	28,645	22,985	24,285	**122,750**
TOTAL BUDGET	**54,365**	**66,470**	**70,645**	**66,485**	**69,785**	**327,750**

Table 1: Breakdown of total spending across the five fiscal years of the plan in the "optimal return on investment" scenario.

6.6.4

Sub-optimal Strategies

While the optimal plan would return the maximum benefit to Canada for the public investment, public spending is constrained by many factors. The major items that were considered in building the sub-optimal scenarios are listed in Table 1. Sufficient information is provided to identify the relative cost savings and impacts of removing selected projects from the program.

Scenario B: Ensuring International Leadership

The first alternate implementation strategy relaxes the goal of near-term exploitation of the current investments and maintains the commitment to new initiatives that keep TRIUMF competitive at the end of the five years. Reducing on-site operations was considered by reducing the budget by about one third (primarily by running the cyclotron for fewer months per year) but retaining progress toward the next generation of ISAC, the ATLAS Tier-1 Data Centre and the physics analysis centre, nuclear medicine, and materials science programs. Compared to the optimal implementation budget, relative cost savings are achieved by reducing cyclotron and ISAC operations by three months per year (out of a usual nine), correspondingly reducing the laboratory's scientific productivity. It would be necessary to maintain roughly a constant total laboratory staffing level, which could be made possible by reducing accelerator applications. This program would require $304 million in total federal funding.

Some of the sacrifices in this scenario include:

- Reduce output of the local accelerator-based science program by reducing operations by one third. Researchers in ISAC-I, such as the nuclear astrophysicists, would be forced to "wait" even longer for access to TRIUMF's beams. Presently, one major experiment in nuclear astrophysics is run each year; this reduction in running time would eliminate TRIUMF's ability to assume world leadership in this exciting and internationally competitive field. For instance, the world's best nuclear astro-

Item	Benefits	Five Year Resources			
		People		Capital M C$	**Total M C$**
		FTE	M C$		
ISAC Next-Generation Facility, including e-linac, specialized actinide beam line and targets The three main elements of the initiative have been broken out separately for ease of the reader.	**Nuclear Physics:** Fundamental symmetries, neutron-rich nuclear structure and astrophysics, long term international leadership in RIB physics **Materials Sciences:** β-NMR program **Industrial Partnerships:** Strong ties to developing expertise in Canadian industry, in particular PAVAC Industries Inc., in the emerging SRF program **University Partnerships:** Large user base **International Partnerships:** Ties to Europe, India, Japan. Retain international leadership in accelerator physics.	53	32	34	**66**
		e-linac			**29**
		Specialized actinide beam line			**17**
		Common infrastructure: Target station and front end			**20**
ATLAS Tier-1 Data Centre and Physics Analysis Centre	**Particle Physics:** Leadership in LHC physics program **Industrial Partnerships:** Enabling computing grid technology development and deployment in Canada **Universities Partnerships:** Ties to 10 leading Canadian universities with more than 40 faculty and 60 graduate students **International Partnerships:** Ties to CERN and leading international particle physics	10	6	9	**15**
Nuclear Medicine Initiative	**Life Sciences:** Understanding of mechanisms for Parkinson's, cancer, and other diseases. Direct benefit to health of Canadians **Industrial Partnerships:** Collaborate with MDS Nordion, BC Cancer Agency, D-Pace, etc. **University Partnerships:** Growing university partnerships in medical isotope production including non-traditional TRIUMF partners	8	5	5	**10**
International Accelerator Contributions	**Particle Physics:** Enable Canadian physics to participate in offsite accelerator-based experiments. **Industrial Partnerships:** Enable Canadian access to industry contracts in a high-technology field **University Partnerships:** Ties to leading Canadian universities **International Partnerships:** Ties to leading international scientific laboratories	4	2.5	4	**6.5**
Experimental Support: Science Division and Universities	**Physics programs:** Support projects in key areas with pressing timescales enabling critical advances **University Partnerships:** Enable university researchers to optimally exploit and leverage other resources	-	-	15	**15**
Cyclotron Operations (effect of reduction of 1/3 for five years)	**Nuclear physics:** Beams for ISAC **Materials Sciences:** Novel μSR and β-NMR programs **Industrial Partnerships:** Production of high-value medical isotopes MDS Nordion solid target facility, commercial irradiation and testing program.	25	15	3	**18**

Table 1: Major items considered in building different TRIUMF programs between 2010 and 2015. The "Cyclotron Operations" item corresponds to a reduction from 9 months to 6 months per year of operations. For simplicity, an estimated TRIUMF 2010–2015 salary average is used to convert all FTEs (labour) into dollars.

physics spectrometer DRAGON in this scenario would no longer be fully leveraged by the laboratory. The reduction in cyclotron operations would also decrease beam delivery to commercial ventures; for example, delivery of proton beams to the MDS Nordion Solid-Target Facility would be reduced by 30%, limiting worldwide availability of several novel high-value medical isotopes (e.g., strontium generator). Approximately $3 million in capital expenditures would be saved.

- Maintain a flat laboratory staffing level by shifting current operations positions into construction efforts for the new accelerator initiatives, and for the ATLAS Tier-1 Data Centre. This approach reduces costs by about $15 million.
- Reduce support that would enable university researcher-led projects at TRIUMF. Fewer university led initiatives would take place, but this reduction would save about $5 million.

Scenario C: Exploit Current Facilities

This implementation strategy seeks to minimize new capital outlays while maximizing return on existing investments. To do so, the scenario investigates the impact of abandoning all new on-site accelerator initiatives while running the current accelerator facilities to maximize the science output. The cyclotron itself would receive no significant upgrades and would undergo minor maintenance-related improvements. Canada would maintain a minimal program at TRIUMF including only the highest priority existing activities such as the ATLAS Tier-1 Data Centre, life sciences effort, and engagement in the international accelerator community. Strategic initiatives designed to move Canada to the forefront would be deferred.

The major sacrifices in this scenario include:

- No new on-site accelerator projects, reducing expenditures by $34 million. This scenario jeopardizes Canada's leading international position in advanced facilities for unstable beams because the major investments of other countries (CERN, Germany, France, US, and Japan) would surpass TRIUMF. Canadian investment in the next Five-Year Plan would be too late to compete.
- TRIUMF would not proceed with the e-linac, target station, and specialized actinide beam line in this scenario.
- Research and development of heavy isotopes would not be possible, eliminating opportunities for commercial and health exploitation of alpha-emitting isotopes for applications such as cancer therapy. Canada's global lead in the medical-isotope market would disappear.
- Stopping all new accelerator projects along with significant reductions in detector design and construction support will reduce spending by an additional $45 million over five years in the personnel budget compared to the optimal scenario TRIUMF staffing level.

	SCENARIO D *Flat-Flat*	
	PEOPLE	**CAPITAL ($k)**
OPERATIONAL COSTS		
NET POWER COSTS		15,000
ADMINISTRATIVE SUPPORT		5,500
ISAC BEAM DEVELOPMENT		3,500
SITE INFRASTRUCTURE		7,000
SAFETY & LICENSING		2,000
ACCELERATOR DIVISION		9,000
ENGINEERING DIVISION		6,000
UNIVERSITY SCIENCE/EXPT SUPPORT		
SCIENCE OPERATIONS-EXPT SUPPORT		9,000
LAB OPERATIONS TOTALS	190	57,000
NEW PROJECTS		
ATLAS TIER-1 CENTRE	10	9,300
FRONT END		
TARGET STATION 1		
SPECIALIZED ACTINIDE BEAM LINE		
ACC REF & UPGR TO 300μA	3	2,000
HELIUM LIQUEFACTION	1	
LIFE SCIENCES	5	3,500
E-LINAC		
SNOLAB	3	100
INTL ACCELERATOR CONTRIBUTIONS	4	200
DETECTOR DEVELOPMENT/SUPPORT	5	200
NEW PROJECTS TOTALS	**31**	**15,300**
TOTAL PERSONNEL REQUIRED	**221**	
TOTAL MATERIALS BUDGET		**72,300**
NEW HIRES		
TOTAL SALARY BUDGET		**150,000**
TOTAL BUDGET ESTIMATE		**222,300**

Table 2: Five-year spending plan for TRIUMF from the federal government in the “Flat-Flat” scenario.

- Staff reduction by 50 FTEs. The affected personnel would most likely be TRIUMF experts in accelerators, making it very difficult to imagine reviving a leading on-site accelerator program in the future.
- Finally, Canada's participation in international accelerator contributions would be scaled back to a bare minimum level, about $4 million.

In this scenario, there would be no e-linac, which would significantly reduce Canadian public/private partnerships between TRIUMF and companies such as PAVAC Industries, Inc., and Canadian CNC Machining, Ltd. The opportunities for breakthroughs in nuclear medicine and accelerator production of medical isotopes would be lost. Canada would maintain the industrial liaison with the international accelerator community as much as possible. International accelerator-technology partnerships with India, Japan, and the European Union would not be possible.

This scenario requires $245 million over five years in federal funding.

The total federal government investment in TRIUMF in 2005–2010, including NRC, CFI for the ATLAS Tier-1 Data centre and μSR beam line plus provincial government matching funds, was $247 million, effectively making this a constant funding level with no increase for inflation.

Scenario D: Constant Budget

The final scenario presented here selects an overall federal funding level for 2010–2015 equal to the NRC contribution agreement for 2005–2010 ($222 million) without inflationary corrections. This does not include the additional funding supporting the core TRIUMF program received from CFI and provincial matching, which brought the total Government of Canada investment to about $247 million. The budgets and personnel for this scenario are shown in Table 2. In this scenario, TRIUMF would be forced to remove all new on-site accelerator initiatives, reduce the nuclear medicine program, and remove all TRIUMF support of the university-research community. The overall staffing level of the laboratory would be reduced by nearly one hundred.

The major sacrifices in this scenario include:

- No new on-site accelerator projects, jeopardizing TRIUMF's leading international position in rare-isotope beam physics in the future, resulting in about $34 million reduction in capital investments.
- Remove all TRIUMF support for university research programs, including removing new ISAC detectors, costing about $6 million.
- Reduce the nuclear medicine program, reducing costs by about $2 million.
- Reduce the international accelerator program, saving about $4 million.
- Cut the laboratory staffing level by 100 FTEs, accounting for the reduced program, saving about $55 million over five years compared to the optimal scenario.
- Funding at this level would require a serious re-evaluation of the goals of the laboratory with the stakeholders and the Government of Canada.

As mentioned above, both of these final scenarios would substantially damage TRIUMF's contribution to the national interest: the reductions in personnel would target the accelerator and engineering physicists, technicians, and operations staff. These teams are elite among the industrialized world and would simply relocate to other countries with more promising and aggressive research programs. Their critical absence would slow and possibly stop TRIUMF's engine of innovation, the drive to develop breakthroughs in accelerator science and technology. AAPS, Inc., would suffer without proximal consulting access; partners like BC Cancer Agency, the Pacific Parkinson's Research Centre, D-Pace, and MDS Nordion would be unable to guarantee the future success of their business operations with the wealth of expertise available through TRIUMF.

6.6.5

Recap of Scenarios

To aid decision makers, several implementation strategies have been presented, including comments on the relative tradeoffs. To achieve an optimal return on Canada's investment in TRIUMF, approximately $328 million is required summed over years 2010–2015. It is clear that the choices made for this Five-Year Plan will have long-term strategic consequences not only for TRIUMF but also for Canada.

The relative tradeoffs among the four scenarios are summarized in Table 1. The four priority activities are all supported effectively and efficiently in the

Scenario	$M	Δ Staff	Super-ISAC	ATLAS	Nuclear Medicine	Cyclotron Operations
A: Optimal	328	20				
B: Ensure International Leadership	303	(5)				
C: Exploit Current Facilities	245	(53)				
D: Constant Budget	222	(96)				

Table 1: Diagram showing the relative tradeoffs among the key initiatives of the five-year vision. Green denotes a fully exploited program, yellow a partially supported program, and red denotes removing a program altogether.

optimal scenario. To achieve Scenario B, operations of the present facilities are truncated to free up personnel and financial resources needed to deliver on the full package of capital initiatives. The consequence, as noted above, is a substantial delay in providing the scientific community with the full dividends of the investments in TRIUMF and its ISAC facilities. Figure 1 captures the change in annual delivery of rare-isotope beams. By definition, Scenario B meets Scenario A at the end of the five-year planning period in terms of capability, but the TRIUMF community would have given up more than 8,000 hours of beam time. TRIUMF is on the verge of being the world's leading ISOL facility. The possibility of achieving world leadership in nuclear astrophysics (*i.e.*, utilizing existing investments in the DRAGON facility) and nuclear structure within the next five years would be forestalled. Key collaborations with international partners would not be possible, such as with CERN on high-power targets. TRIUMF's early access to lead the world in specialized actinide beam physics would be severely compromised.

Scenario C proposes to support the exploitation of current ISAC facilities operations. The result is a decrease in the number of staff, leaving TRIUMF in an internationally non-competitive position in 2015. The existing single ISAC beam line would be forced to service all projects, significantly slowing the science output of TRIUMF and reducing the user community. Finally, Scenario D

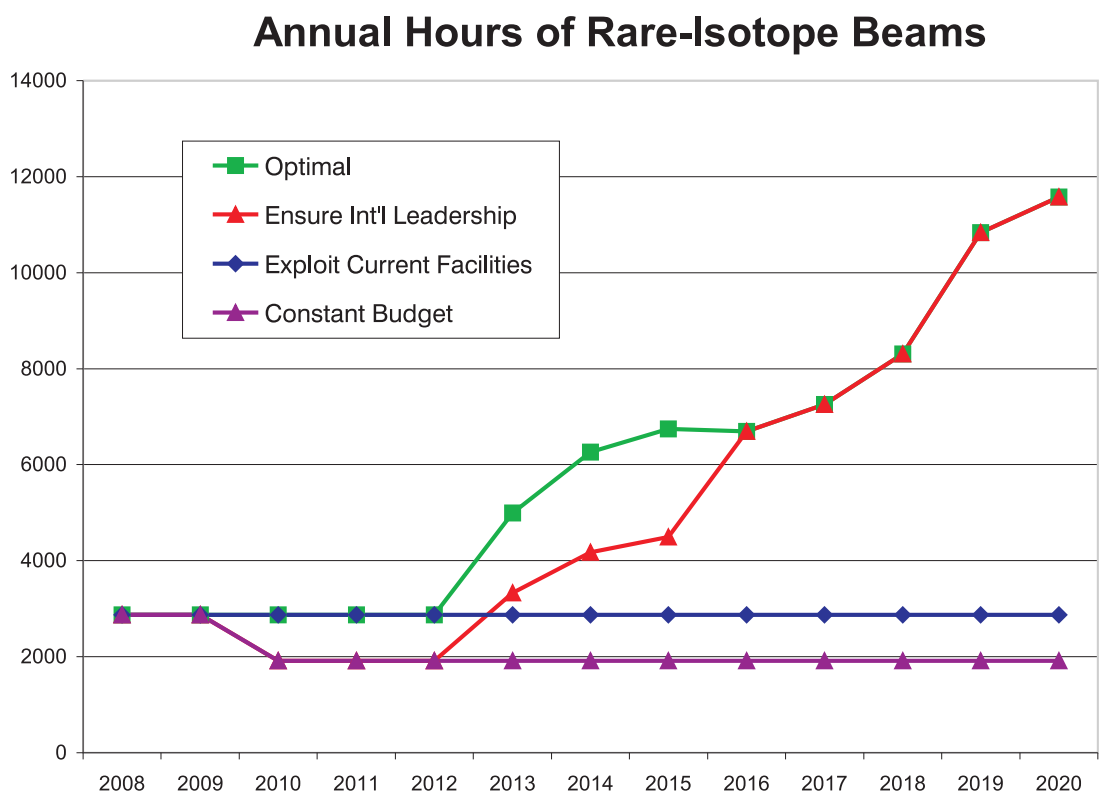

Figure 1: Chart showing year-by-year annual totals for delivery of rare-isotope beams to science experiments at TRIUMF for the four different scenarios. Continued operations are assumed in the 2015–2020 period.

indicates a major reduction in force and undermines the ability to undertake new initiatives.

Scenario C puts TRIUMF's long-term future at risk in two ways: because the reduction in force in key areas will likely be irreversible and because other nations will reposition themselves to attract scientific and technical talent away from Canada. Scenario D will retain limited international competitiveness through the ATLAS Tier-1 Data Centre, but Canada will not be able to guarantee credible future participation in other key global science projects.

6.6.6

Provincial Participation

The proposed transformation of TRIUMF relies upon the development of new infrastructure at the TRIUMF site for two new buildings to house initiatives in nuclear medicine and information technology and an underground complex for the new accelerator beams. These capital initiatives are physically and scientifically linked. Their construction will build and expand upon TRIUMF's growing collaborations with Canadian research institutions, international partners, and the existing highly sophisticated detector and accelerator infrastructure and expertise at TRIUMF. Historically, the Province of British Columbia has funded similar TRIUMF infrastructure.

TRIUMF is seeking provincial support for a key set of three civil-construction initiatives that will enable and drive its decadal vision:

- A specialized Health Sciences Building to support the expansion of TRIUMF's world-leading nuclear-medicine program and to bring TRIUMF together with its team of industrial and academic partners in a laboratory that meets Good Manufacturing Practices. The building will house a cyclotron underground and hot cells, microfluidics, and a small-animal barrier facility in the floors above.
- A purpose-built data laboratory building for the Canadian ATLAS Tier-1 Data Centre to accommodate its growth as the LHC project at CERN ramps up and the global scientific community relies more heavily upon Canada.

- An underground complex to transport the new accelerator beams in a safe and secure manner from their origin to the existing experimental halls.

Figure 1 shows a sketch of the two above ground buildings. The construction of these three elements can be phased, although full value of the TRIUMF Five-Year Plan will only be realized when all three are completed.

Primary support from the Province of British Columbia is being sought with the help of the University of British Columbia, Simon Fraser University, and the University of Victoria. Discussions have been positive. TRIUMF and its stakeholders are committed to reaching a mutually beneficial arrangement during FY2009. In the scenarios, provincial government support for these three key projects is assumed.

Figure 1: Sketch of the proposed buildings.

6.6.7

Conclusion

The TRIUMF Five-Year Plan lays out an ambitious vision for the future and calls for a transformation of the laboratory. It will position Canada to be a key member of the global science, technology, and innovation community. More importantly, however, a major investment by the Government of Canada in scientific research will excite the next generation of scientists, engineers, and citizens. It will send a signal that Canada is prepared to face head-on the challenges of energy, environment, human health, and sustainability that will define the next century.