BEAMTIME

TRIUMF

News from Canada's national laboratory for particle and nuclear physics

FALL 2013 | VOLUME 10 ISSUE 2

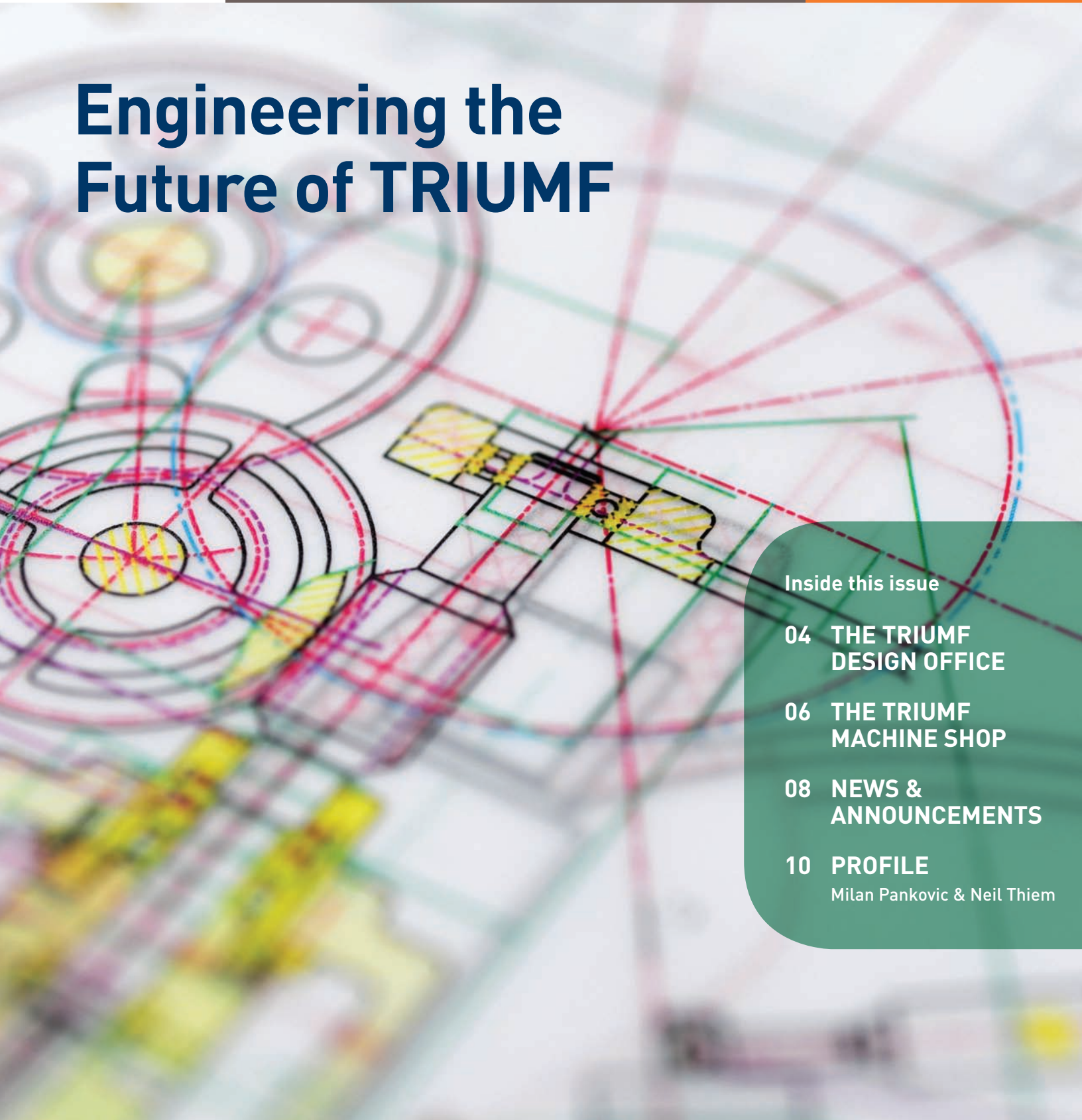

Engineering the Future of TRIUMF

Inside this issue

fall

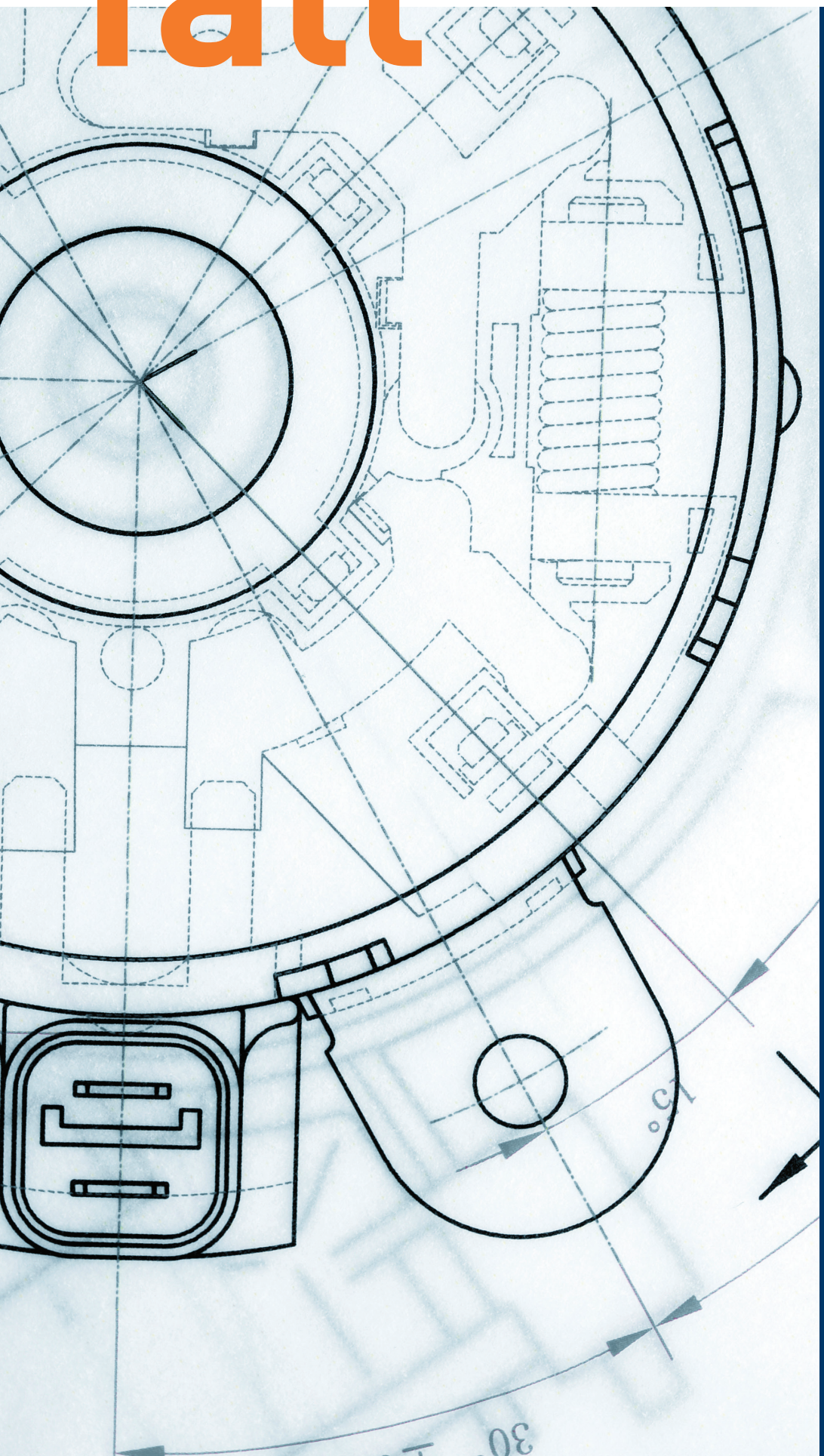

Editor:
Marcello Pavan

Production:
Serengeti Design Group

Beamtime is available online at:
http://www.triumf.ca/home/for-media/publicationsgallery/newsletter

Inquiries or comments to:
newsletter@triumf.ca

TRIUMF
4004 Wesbrook Mall
Vancouver, BC V6T 2A3
Canada

+1 604 222 1047 telephone
+1 604 222 1074 fax

www.triumf.ca

To obtain **Beamtime** by PDF, sign up at http://lists.triumf.ca/mailman/list-info/triumf-publications

TRIUMF

TRIUMF is funded by a contribution through the National Research Council of Canada.

The province of British Columbia provides capital funding for the construction of buildings for the TRIUMF Laboratory.

Jim Hanlon | Interim CEO/CAO, TRIUMF

"The only constant is change."

– Heraclitus

If there is one thing that is always true at TRIUMF, it's that the lab is changing.

And so we are encountering a change in the face of our leadership. After a successful six-year tenure as Director, Nigel Lockyer has moved to the U.S. Fermi National Accelerator Laboratory to lead their efforts to uncover the secrets of the Higgs boson and neutrinos to reveal the hidden nature of energy, space, and time. We are proud to see Nigel tackle this challenge, and we are sad to see him go.

The TRIUMF Board of Management has appointed an interim Leadership team chaired by a Chief Executive Officer / Chief Administrative Officer while the international search for TRIUMF's next director is underway. I am honoured to serve in this interim role and committed to keeping TRIUMF on track to fulfilling its commitments and securing a new future with the Five-Year Plan 2015–2020.

This issue of Beamtime addresses a different kind of change, namely the remarkable transformation of our design and fabrication facilities over the past decade. As Canada's national laboratory for particle and nuclear physics, TRIUMF is associated with leading scientific discovery in these areas, and as Canada's national accelerator laboratory, we are recognized for our prowess in the fundamental research and technology that power those discoveries. Yet, this high-profile science depends on teams of top-level craftsmen, technicians, and engineers working diligently behind the scenes to make this ever more technologically-sophisticated science possible.

TRIUMF's Design Office and Machine Shop truly have been able to evolve to meet the steadily-increasing challenge of turning the visions of inspired physicists into reality. This issue explores and celebrates these core capabilities that make TRIUMF the incredible resource for Canada that it is. I invite you to peruse these pages and imagine for yourself how you would turn your experimental challenge into reality, be it mechanical, electrical, computational, cryogenic … whatever! Don't worry—if you cannot figure it out, TRIUMF can.

> "[TRIUMF's] science depends on … top-level craftsmen, technicians, and engineers"

The TRIUMF Design Office

From Hand Sketching to Immersive Virtual Reality

by Daniel Rowbotham, Head of Mechanical Design

The first computer-aided design systems were a transformative, but evolutionary, advance over the preceding age-old pen-and-paper techniques. Modern 3D-based systems have shifted the mechanical design paradigm, with new advances promising even more radical capabilities ahead. The TRIUMF Design Office was — and will be — there every step of the way.

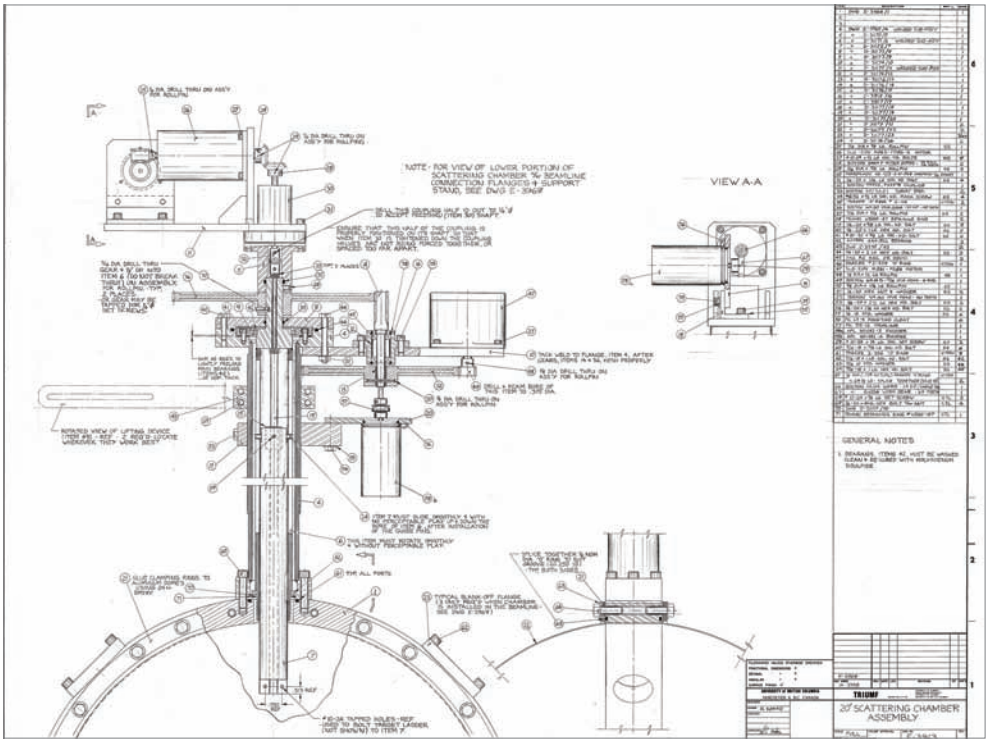

Fig. 1: (ca. 1985) An assembly of a scattering chamber, hand drawn on vellum paper by Roland Kokke, a 38-year veteran of the TRIUMF Design Office.

Between 1970 and 1985 TRIUMF's Design Office employed two types of engineering graphical representation, perspective drawing and orthographic projection, which were hand drawn with pencil or ink onto either Mylar film or vellum. The designer of this era was required to think like an engineer but also like an artist, with the skills and patience to produce intricate drawings taking considerable time and effort (see Figure 1). Circa 1985, the TRIUMF Design Office introduced computer-aided design (CAD), with the use of AutoCAD™, an application that also worked in two dimensions but significantly increased design productivity and eventually emulated our paper drawing process. AutoCad™ facilitated the creation, duplication and revision of electronic drawings at a significantly faster rate. However, though AutoCAD™ could display a design, the geometry did not hold design information beyond the actual lines and circles required for the creation of the object (see Figure 2). Furthermore, the two-dimensional (2D) drawings produced by AutoCad™ were more of an indirect representation of the end product, providing opportunity for misinterpretation and error. Hand sketching a design during the ideation stage was still an integral tool of the designer.

> In 2006, [...] the TRIUMF Design Office began a paradigm shift

In 2006, with the advancements in computer- and graphics-processing speeds, the TRIUMF Design Office began a paradigm shift, transitioning from 2D to 3D design by introducing a parametric feature-based modelling approach utilizing SolidWorks™. This tool provided unparalleled advantages: realistic visualization, design intent, continuity of effort, and unambiguous communication. Its capacity in graphical representation proved much more powerful, both as a thinking and communication tool, and it has since become our primary tool for defining geometry during the mechanical design process (see Figure 3).

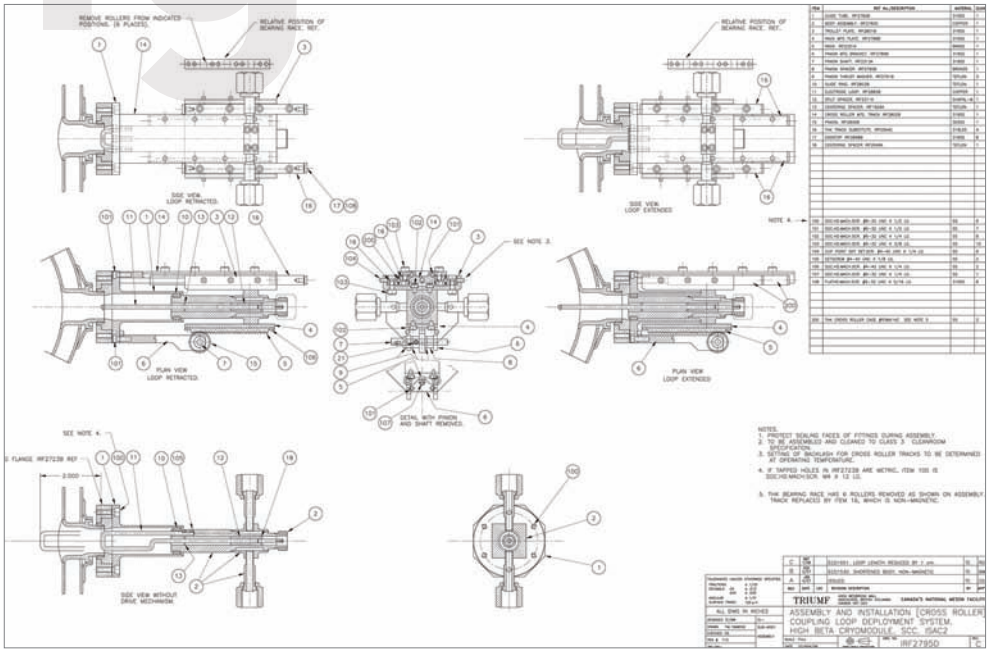

Fig. 2: (ca. 2000) An AutoCad™ illustration of a coupling loop deployment system, created by Tim Emmens, a 34-year veteran of the TRIUMF Design Office.

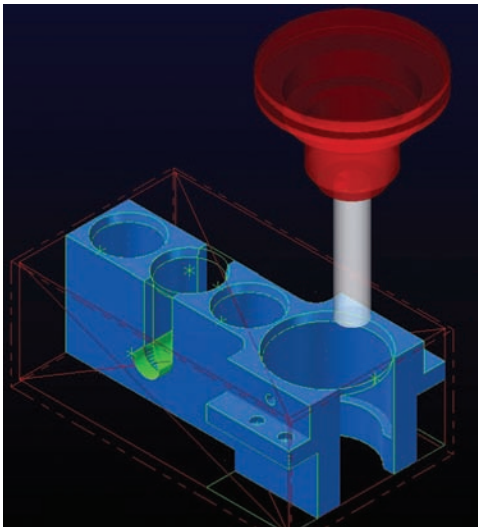

Fig. 4: (2013) A virtual-tool path performed on a Design Office model with the use of MasterCAM™, the Machine Shop's computer-aided manufacturing application that directly imports SolidWorks™ models.

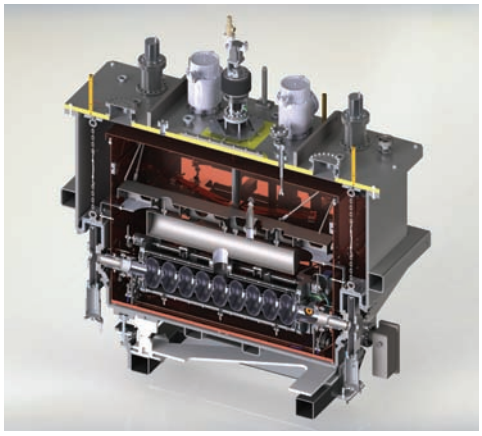

Fig. 3: (ca. 2003) A virtual prototype of the ARIEL Injector Cryomodule created in SolidWorks™ in a collaborative effort by the TRIUMF Design Office.

For the modern designer, the future is even more exciting.

It is now possible to incorporate the intellectual arrangements of features on parts, and parts within assemblies, and then validate intent through virtual prototyping. Drawings are now automatically generated from the model and remain linked to it throughout the drawing lifecycle. This feature reduces drawing-creation and revision-process times, increasing the speed, accuracy, and consistency of our output. At the end of the design cycle, the model and drawings exist as a fully-defined and controlled digital package that contains enough data to be directly imported into the TRIUMF Machine Shop's computer-aided manufacturing machines, which can directly and efficiently produce the end product. (See also accompanying article this issue).

For the modern designer, the future is even more exciting. Advancements in modeling techniques will allow designers to interact directly with the geometry of their models without having to edit the interim model stages as one would in parametric modeling. This enhancement will enable designers to create very complex geometries utilizing a much simpler and faster method, thereby allowing a greater selection of design options to engineers and scientists. The technology behind *augmented reality* will permit designers to project 3D models into real-world environments to exhibit proper scaling and demonstrate function to a broader audience. The development of *leap motion*, a technology that tracks hand movements within 100th of a millimetre at 200 frames per second, will enable designers to create and manipulate 3D models using hand gestures. This technology is the precursor to *immersive virtual reality*, which promises the ability to manipulate geometric shapes using ocular headsets and haptic gloves. And with further advancements in *additive manufacturing*, aka 3D printing, the designers of the imminent future will be able to move their geometric models easily into reality, producing prototypes with little or no machining expertise required.

The TRIUMF Design Office looks forward to embracing yet another revolutionary paradigm shift!

The TRIUMF Design Office consists of a diverse group of ten highly innovative mechanical designers each bringing their own unique abilities in providing the nexus for the creation of successful design outputs that support the development of experimental equipment, instrumentation, and systems associated with TRIUMF's program of research.

The TRIUMF Machine Shop

Machine Shop Tools up for the Challenges

by Ivor O. Yhap, Machine Shop Supervisor

TRIUMF'S success in developing new components, detectors, and experimental equipment depends not only on its scientists and engineers but also on the skill sets of the CNC (computer numerically controlled) machinists/programmers, manual machinists, and welders/fabricators.

Fig. 1: Machinist Clayton Handley supervising one of TRIUMF's latest CNC machining centres. An example of his handiwork is shown in the foreground.

This group of skilled craftsmen are continually faced with new challenges with regards to complex designs, exotic materials, and very strict timelines.

Over the past ten years the machine shop has gone through a major restructuring and modernization process. In many ways the changes have mirrored those in the Design Office (see accompanying article in this issue), where manually-operated tools have given way to computer-controlled machines, with the concomitant improvement of speed, precision, and repeatability of machined components of ever-increasing complexity. In fact, the new tools can produce fantastically-complicated objects considered sheer fantasy a short while ago. (See Figure 2) As a result, TRIUMF scientists, engineers, and designers now have considerably more flexibility and can deploy much more creativity when designing components for their projects.

The machine shop has gone through a major [...] modernization process.

The Machine Shop has upgraded its standard array of manually-controlled machines (lathes, mills, etc) with seven CNC machining centres, one water-jet cutting machine and one electron-beam welder. The computer-controlled machines employ the Mastercam™ software environment for tool control. This enables the machines to import SolidWorks™ design files directly from the TRIUMF Design Office, increasing efficiency and eliminating a source where

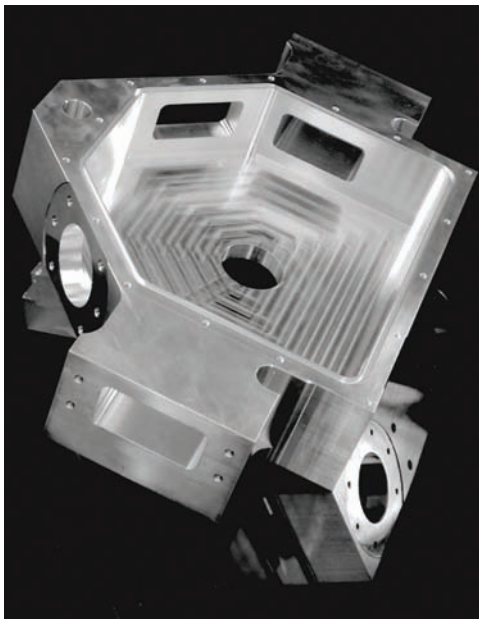

Fig. 2: An example of the complex components crafted from a single block of metal by the CNC machine centres.

operator error might occur. Overall shop efficiency gained a major improvement with the recent acquisition of a water-jet cutting machine, which has freed up machining time by eliminating the need to machine large profiles on plates and sheet metal. These facilities are operated and supported by a top-notch team consisting of one supervisor, one foreman, one stand-in foreman, thirteen machinists, two welders/fabricators, one water-jet operator, and one assistant material handler (see Figure 3). In instances where the Machine Shop is oversubscribed or underequipped for a particular job or time-sensitive large production runs, work is contracted out to local industries as part of TRIUMF's mandate to support the local economy.

The (CNC) machines [...] import [...] design files directly from the TRIUMF Design Office.

One area that highlights the requirements faced by the Machine Shop is producing

> "These facilities are operated and supported by a top-notch team"

Fig. 3: Members of the TRIUMF Machine Shop pose proudly among the tools of their trades.

components for high-vacuum applications. The TRIUMF accelerators, beam lines, and many experimental facilities operate at very high vacuum — down to conditions outside the space station! — so highly specialized welding and fabrication techniques are critical to success. These high-vacuum components, including diagnostic boxes and bellows assemblies, also must be leak tested for quality assurance. Fusion welding by our electron-beam welder is performed in vacuum and is applicable for both similar and dissimilar metals. Electron-beam welding (EBW) is also used to produce targets for isotope production, meson production, and ISAC radioactive-ion beam production. Typically these targets require exotic materials such as tantalum, molybdenum, or very thin foils where EBW is the only assembly technique possible.

In these heady days of large-scale facility developments such as ARIEL, users of the machine shop are increasingly appreciative of the collective skill sets of our craftsmen and becoming more proactive with regards to consulting about design, machining, and fabrication issues. And with the convergence of leading-edge fabrication and design expertise at TRIUMF, one can expect the Machine Shop to be a backbone of lab operations well into the future.

News & Announcements

ARIEL Building Completed

by Melissa Baluk

The construction of TRIUMF's flagship Advanced Rare IsotopEs Lab (ARIEL) reached an important milestone with the completion of the civil construction, including the new services building. ARIEL is a major addition to the TRIUMF complex that will greatly expand the scientific potential of the ISAC radioactive-ion-beam facility. The finish line came into view with the dismantling of the crane tower in early May 2013, and the finishing touches were applied without fanfare by late summer.

Nearly 6000 cubic metres of concrete, or about 600 truckloads and 100,000 hours of labour, went into the six-storey structure. With the heavy lifting (literally) completed, work on preparing the building for beam lines began in earnest. Inside its massive caverns, ARIEL will house the radioactive ion-beam production facilities and the beam lines from the new superconducting electron linear accelerator and the existing proton cyclotron. Plans are for the first beam from the new electron accelerator to be transported to the service building by fall of this year.

Engineering TRIUMF's Future

by Tim Meyer

TRIUMF employs roughly 500 staff, of which about 50 are research scientists who are the principal investigators for the competitive, peer-reviewed research conducted at the lab. But what about the other 450 or so people? They are the foundation enabling and supporting TRIUMF's world-class research. World-class research requires world-class people, and TRIUMF's collection of highly-trained technicians, engineers, and IT talent is likely unmatched anywhere else in the country.

TRIUMF was founded more than four decades ago by Canadian universities to design, build, operate, and maintain infrastructure for research that no single university could manage on its own. The technical team that has blossomed at TRIUMF is recognized as highly-valued specialists in their areas, whose portfolio of transferable skills has only increased in the face of the unique technical challenges posed by the lab. In recent years TRIUMF has made a concerted effort to get more and more of its engineers recognized with the "Professional Engineer" (or P.Eng) credential through the Association of Professional Engineers and Geoscientists of BC (APEGBC www.apeg.bc.ca). TRIUMF now has approximately 20 P.Eng. engineers on staff and about a half-dozen Engineers in Training (EIT). Several secured their certification via professional development at the lab, among them recently Grant Minor, Bob Sidhu, and Aurelia Laxdal, with Design Office leader Dan Rowbotham formally recognized as a Professional Engineering Manager. Such an impressive group of highly-qualified personnel will serve TRIUMF well as it heads into the next phase of its research life with the ARIEL project.

You can learn more about TRIUMF's highly-skilled professionals by visiting the career-profiles site at http://www.triumf.ca/home/careers-at-triumf/career-profiles

TRIUMF and VECC sign cooperation agreement

by Ariane Madden

At a formal ceremony at TRIUMF on August 8, directors Nigel Lockyer (TRIUMF) and Dinesh Srivastava of the Variable Energy Cyclotron Centre (VECC) of Kolkata, India inked a new partnership agreement valued at $10.4 million for the advancement of isotopes and accelerators. The agreement will see manpower and resources exchanged between the facilities to complete their respective next-generation rare-isotope facilities — ARIEL at TRIUMF and ANURIB at VECC. Five years of collaborative research and development beween TRIUMF and VECC

led to this new partnership framework, which also involves a number of Canadian companies. For example, PAVAC Industries, Inc. of Richmond, BC will be manufacturing the high-tech cryomodules using technology transferred from TRIUMF through AAPS, Inc., TRIUMF's non-profit commercialization partner. The ceremony was attended by federal Minister of National Revenue, Kerry-Lynne Findlay and provincial International Trade Minister Teresa Wat.

Canadian Solution to Medical-Isotope Crisis Demonstrated

by Tim Meyer

With Canadian-developed tools and technology, a national team led by TRIUMF reached a crucial milestone in June 2013 at the BC Cancer Agency (BCCA) by demonstrating a viable alternative for supplying key medical isotopes to a metropolitan area. The team used a medical cyclotron designed and manufactured by Advanced Cyclotron Systems, Inc. and outfitted with a specially-designed target add-on (see photo) to successfully produce enough technetium-99m (Tc-99m) overnight to supply an urban area the size of Vancouver. This achievement eliminates the need for nuclear reactors utilizing weapons-grade uranium (which is the technology used currently) to produce this key medical isotope, and is a crucial step toward meeting Canada's isotope needs after the NRU reactor at Chalk River, ON ceases production in 2016.

In addition to TRIUMF, the team includes experts at the BC Cancer Agency, the Centre for Probe Development and Commercialization, and the Lawson Health Research Institute. The team's next milestones include engineering optimization and regulatory approval, which will pave the way to creating a competitive proposal for diversifying the Tc-99m supply chain with robust and cost-effective cyclotron-based technology.

Initial research was supported by Canada's National Sciences and Engineering Research Council and the Canadian Institutes for Health Research through a grant awarded via UBC led by François Bénard (BCCA) and Tom Ruth (TRIUMF).

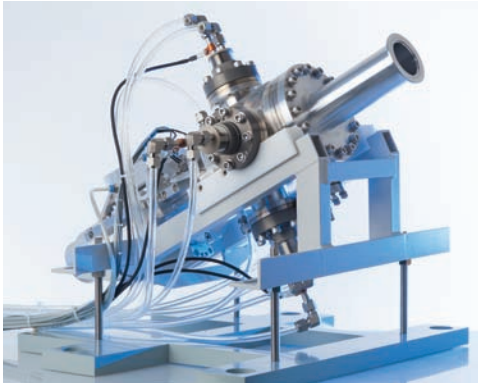

For details see
http://www.triumf.ca/nrcan-isotopes

Merminga honoured with Women in Science award

by Ariane Madden

Dr. Lia Merminga, Head of TRIUMF's Accelerator Division at TRIUMF, was a recipient of the 2013 Women In Science™ award for Community Leadership and Excellence from the Minerva Foundation for BC Women. The awards honour British Columbian women who excel in their scientific fields. The award recognized Lia's integrity, excellence, and vision not only for TRIUMF, but also for the entire field of accelerator-based physics and technology.

A native of Greece, Lia came to TRIUMF in 2008 after serving as director of beam physics at the Jefferson Laboratory in Virginia. She has garnered respect and admiration from experts in her field world wide, and TRIUMF is proud to have her as one of our own.

Calendar

Upcoming Important Events
(at TRIUMF unless otherwise stated)

Jan 13 & 14	MMS-EEC
Jan 24 & 25	SAP-EEC
Feb 14–16 Banff Centre, AB	WNPPC Conference
Mar 28	AAPS Board of Directors Meeting
Mar 31 & Apr 1	LSPEC
Apr 4	Board of Management Meeting
May 12 & 13	ACOT Meeting

TRIUMF Event Calendar
admin.triumf.ca/d2w-pub/eventscal/display

profile

Milan Pankovic and Neil Thiem

Old-school Savvy and New-age Skills Crafting TRIUMF's Future

by Gabriel Baron

Left: Milan Pankovic
Right: Neil Thiem

Operating behind the scenes, the TRIUMF Machine Shop is critical to the continued successful operation of the laboratory. And it takes master craftsmen like Machinist Foreman Milan Pancovic and fabrication welder Neil Thiem to meet the technical challenges posed by TRIUMF's scientists and engineers.

Milan is the longest-serving member in the Machine Shop with over 35 years of service. When he started, TRIUMF used machinists like Milan to operate manual lathes and milling machines, often taking many weeks to fabricate a single component. Since then, Milan has seen the Machine Shop evolve as TRIUMF quadrupled in size, with recent investments in new machining technology creating a much more productive facility utilizing CNC (Computerized Numerical Control) tools capable of fabricating components in just a day that once required weeks (to within 5/10000th of an inch precision!). The roles of the shop's master machinists have changed from manually operating the tools to entering design parameters into the CNC computer. The machinists receive a blueprint from the Design Office, formulate a fabrication plan and then input the dozens of variables required for the machine to do its job correctly, ranging from material composition, to tooling parameters, to component location of up to 5 different axes. After the fabrication program is verified, the machine runs and the machinist monitors the work as the component is created. Years of experience have given Milan a deep understanding of the wide variety of materials available and how best to machine them.

The Machine Shop is staffed not only with savvy veterans like Milan, but also talented newcomers who bring new-age skills to the team. Neil Thiem is one of the newest members who joined TRIUMF two years ago with 20 years worth of welding and fabrication experience. He previously worked in Afghanistan with the Canadian Armed Forces, helping to fix equipment requiring heavy-duty repair or fabrication, from trucks to tanks and even drones. Neil's improvisational experience on complicated high-tech machinery in the field is very well matched to TRIUMF's problem-solving research and development nature. When not busy welding beam lines, he is solving unique problems faced by staff scientists, like fabricating a component able to withstand 10,000 lbs. of pressure made of titanium on one side and steel on the other. Through experimentation Neil found a novel way to bind these metals together with silver solder. The end result? Happy scientists and a successful experiment.

All the old-school veterans and new-age talent in the Machine Shop are at the top of their game, and more than equal to the unique challenges thrown at them by the lab. Master craftsmen like Milan and Neil work diligently to ensure the ongoing success of the lab's scientific program, and TRIUMF is lucky to have them all.

High School Fellows: High School Fellowship students (from left) Keiler Totz, Ben Friedman, and Lloyd James adjacent their supervisors Stefan Zeisler, Ruediger Picker, and Fabrice Retiere, with TRIUMF Director Nigel Lockyer (centre right). The Fellows were chosen from among the top science students in British Columbia, and took part in a six-week work term at TRIUMF, finishing in early August with a talk at the Summer Symposium.

Photo: CUPC 2013

TRIUMF Symposium graduates excel at CUPC: Undergraduate students Sebastien Rettie, Ben Davis-Purcell, and Chelsea Dunning (R-L) received the top three honours, respectively, for their particle/nuclear physics presentations at the annual Canadian Undergraduate Physics Conference, hosted by McMaster University in October.

TRIUMF goes into the Community: Staff scientist (and local resident) Colin Morton and graduate student Ewan Hill interact with guests visiting the TRIUMF booth at the nearby Wesbrook Village Festival on Saturday September 7.

Unveiling the Universe public lecture: Dr. Paul Schaffer, Head of TRIUMF's Nuclear Medicine Division, presented his lecture November 27 on "Medicine Accelerated: Canada's Role in the Medical Isotope Revolution" to an appreciative crowd at the TELUS World of Science in Vancouver.

TRISEP: The inaugural Tri-Institute Summer School on Elementary Particles (TRISEP) took place at TRIUMF July 1-12, 2013, where international graduate students and post-doctoral fellows heard from leading experts on cutting-edge particle physics. See www.trisep.ca for more information.

Photo: Nicole Marie Bienvenu

The Community comes to TRIUMF: Gusting winds of nearly 80 km/h and torrential rain weren't enough to stop nearly 1,200 people from attending TRIUMF's 2013 Open House on Saturday September 28, which celebrated the 100th anniversary of the discovery of isotopes.

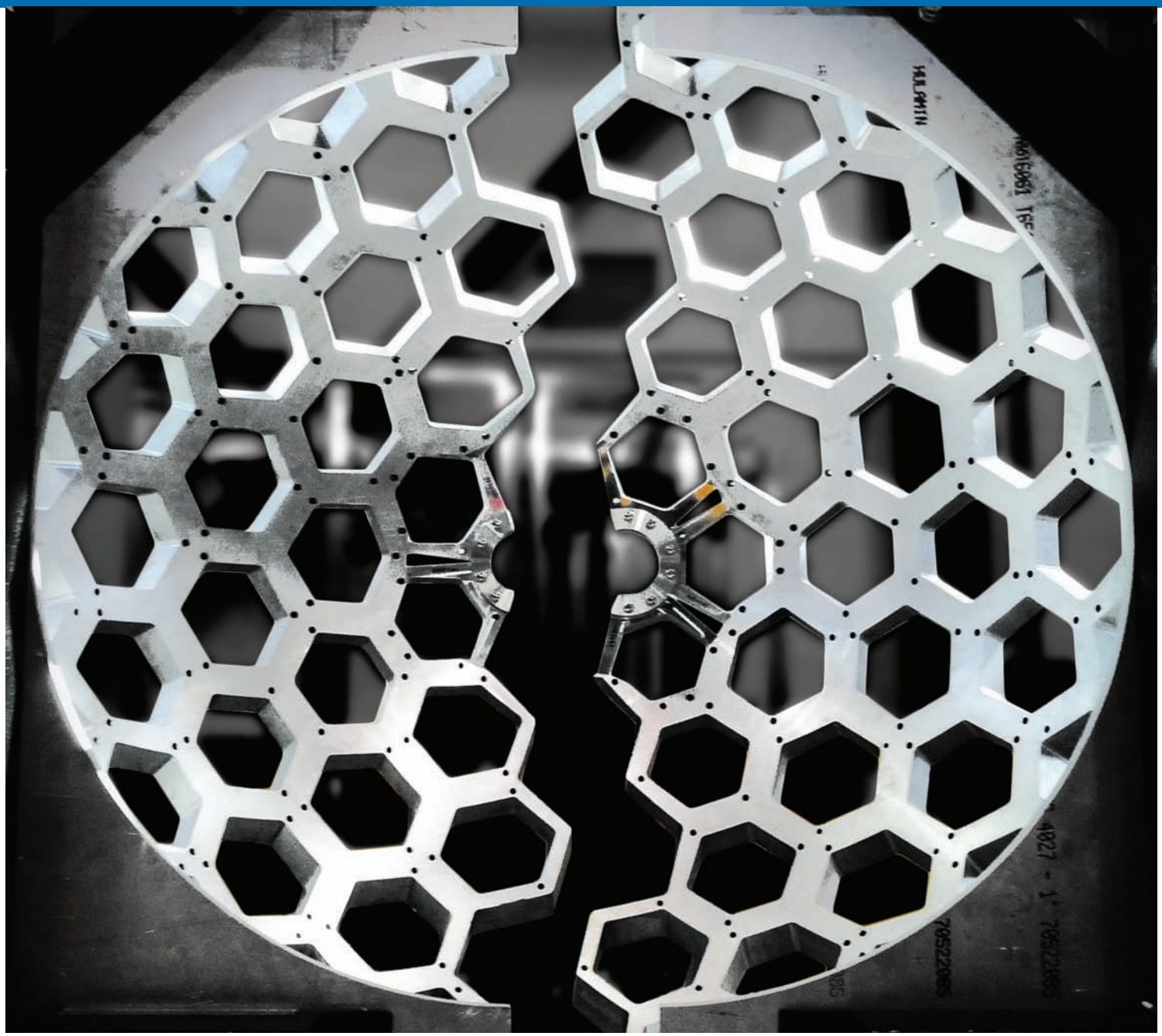

Stargate

The DESCANT neutron detector array

Seen head on without the detectors that will soon populate it, the frame of the DESCANT neutron array is eerily reminiscent of the space portal visualized in the television series "Stargate". DESCANT, designed by the TRIUMF Design Office, will work in tandem with both the TIGRESS and GRIFFIN gamma-ray spectrometers to detect neutrons emanating from nuclear reactions involving radioactive isotopes.